Powerware Series

Eaton® 5130 Rack/Tower UPS
1000–3000 VA
User's Guide

Powering Business Worldwide

Requesting a Declaration of Conformity

Units that are labeled with a CE mark comply with the following harmonized standards and EU directives:

- Harmonized Standards: EN 62040-1-1 and EN 62040-2; IEC 60950-1
- EU Directives: 73/23/EEC, Council Directive on equipment designed for use within certain voltage limits
  93/68/EEC, Amending Directive 73/23/EEC
  2004/108/EEC, Council Directive relating to electromagnetic compatibility

The EC Declaration of Conformity is available upon request for products with a CE mark. For copies of the EC Declaration of Conformity, contact:

Eaton Power Quality Oy
Koskelontie 13
FIN-02920 Espoo
Finland
Phone: +358-9-452 661
Fax: +358-9-452 665 68

Eaton, Powerware, FERRUPS, and LanSafe are registered trademarks of Eaton Corporation or its subsidiaries and affiliates. Microsoft and Windows are registered trademarks of Microsoft Corporation in the United States and other countries. Phillips is a registered trademark of Phillips Screw Company. National Electrical Code and NEC are registered trademarks of National Fire Protection Association, Inc. Phillips is a registered trademark of Phillips Screw Company.All other trademarks are property of their respective companies.

©Copyright 2008–2010 Eaton Corporation, Raleigh, NC, USA. All rights reserved. No part of this document may be reproduced in any way without the express written approval of Eaton Corporation.

Class A EMC Statements (Low-Voltage Models)

FCC Part 15

NOTE This equipment has been tested and found to comply with the limits for a Class A digital device, pursuant to part 15 of the FCC Rules. These limits are designed to provide reasonable protection against harmful interference when the equipment is operated in a commercial environment. This equipment generates, uses, and can radiate radio frequency energy and, if not installed and used in accordance with the instruction manual, may cause harmful interference to radio communications. Operation of this equipment in a residential area is likely to cause harmful interference in which case the user will be required to correct the interference at his own expense.

EN 62040-2

Some configurations are classified under EN 62040-2 as "Category C2 UPS." For these configurations, the following applies:

WARNING This is a category C2 UPS product. In a residential environment, this product may cause radio interference, in which case the user may be required to take additional measures.

Class B EMC Statements (High-Voltage Models)

FCC Part 15

NOTE This equipment has been tested and found to comply with the limits for a Class B digital device, pursuant to part 15 of the FCC Rules. These limits are designed to provide reasonable protection against harmful interference in a residential installation. This equipment generates, uses and can radiate radio frequency energy and, if not installed and used in accordance with the instructions, may cause harmful interference to radio communications. However, there is no guarantee that interference will not occur in a particular installation. If this equipment does cause harmful interference to radio or television reception, which can be determined by turning the equipment off and on, the user is encouraged to try to correct the interference by one or more of the following measures:

- Reorient or relocate the receiving antenna.
- Increase the separation between the equipment and the receiver.
- Connect the equipment into an outlet on a circuit different from that to which the receiver is connected.
- Consult the dealer or an experienced radio/TV technician for help.

Special Symbols

The following are examples of symbols used on the UPS or accessories to alert you to important information:

RISK OF ELECTRIC SHOCK - Observe the warning associated with the risk of electric shock symbol.

CAUTION: REFER TO OPERATOR'S MANUAL - Refer to your operator's manual for additional information, such as important operating and maintenance instructions.

This symbol indicates that you should not discard the UPS or the UPS batteries in the trash. This product contains sealed, lead-acid batteries and must be disposed of properly. For more information, contact your local recycling/reuse or hazardous waste center.

This symbol indicates that you should not discard waste electrical or electronic equipment (WEEE) in the trash. For proper disposal, contact your local recycling/reuse or hazardous waste center.

Table of Contents

1 Introduction 1

2 Safety Warnings 3

3 Installation 19

Inspecting the Equipment 19
Checking the Accessory Kit 20
Connecting the UPS Internal Battery 22
UPS Setup 23
Rackmount Setup 23
Required Tools 23
Installing the Rail Kit 24
Tower Setup 25
Installing the UPS 28
RPO and ROO Installation 31
UPS Rear Panels 33

4 Operation 35

Turning the UPS On 35
Starting the UPS on Battery 36
Turning the UPS Off 36
Operating Modes 37
Normal Mode 37
Battery Mode 38
Standby Mode 38

5 Additional UPS Features 39

USB Port 39
Contact Communication Port (optional) 41
Load Segments (PowerShare) 42
Customizing the UPS with the UPS Configuration Tool 43

6 UPS Maintenance 47

UPS and Battery Care 47
Transporting the UPS 47
Storing the UPS and Batteries 48
When to Replace Batteries 48

Replacing Batteries 48
How to Replace Internal Batteries 49
How to Replace Extended Battery Modules 51
Recycling the Used Battery or UPS 52
7 Specifications 53
8 Troubleshooting 61
Audible Alarms and UPS Conditions 61
Service and Support 63
9 Warranty 65
Two-Year Limited Warranty with Extension to Three-Year Limited Warranty (US and Canada) 65
Load Protection Guarantee (US and Canada) 67

Chapter 1 Introduction

The Eaton® 5130 uninterruptible power system (UPS) protects your sensitive electronic equipment from basic power problems such as power failures, power sags, power surges, brownouts, and line noise.

Power outages can occur when you least expect it and power quality can be erratic. These power problems have the potential to corrupt critical data, destroy unsaved work sessions, and damage hardware — causing hours of lost productivity and expensive repairs.

With the Eaton 5130, you can safely eliminate the effects of power disturbances and guard the integrity of your equipment. The Eaton 5130 was designed for critical applications such as PCs, servers, workstations, and telecommunications equipment.

Figure 1 shows the Eaton 5130 UPS with an optional Extended Battery Module (EBM).

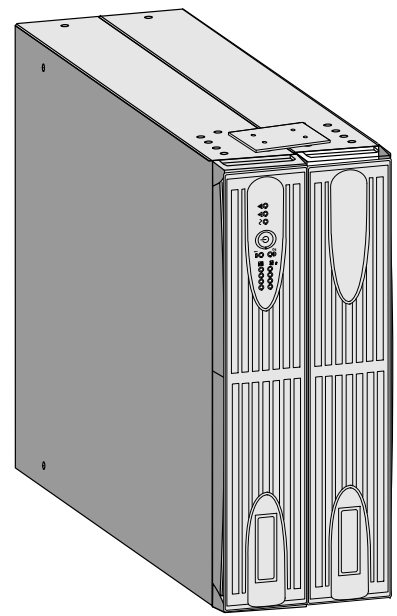

Figure 1. Eaton 5130 UPS with Optional EBM

Providing outstanding performance and reliability, the Eaton 5130's unique benefits include:

- Hours of extended runtime with up to four EBMs.
- Start-on-battery capability for powering up the UPS even if utility power is not available.
- Hot-swappable batteries that simplify maintenance by allowing you to replace batteries safely without powering down the critical load.
- Shutdown control through the remote power-off (RPO) and remote on/off (ROO) port.
- Two standard communication options with a USB port and an RS-232 serial port.
- Advanced power management for graceful shutdowns and power monitoring.
- Sequential shutdown and load management through separate receptacle groups, called load segments (PowerShare).
- Optional communication cards with enhanced communication capabilities for increased power protection and control.
- Backed by worldwide agency approvals.

Chapter 2 Safety Warnings

IMPORTANT SAFETY INSTRUCTIONS
SAVE THESE INSTRUCTIONS

This manual contains important instructions that you should follow during installation and maintenance of the UPS and batteries. Please read all instructions before operating the equipment and save this manual for future reference.

DANGER

This UPS contains **LETHAL VOLTAGES**. All repairs and service should be performed by **AUTHORIZED SERVICE PERSONNEL ONLY**. There are **NO USER SERVICEABLE PARTS** inside the UPS.

WARNING

- This UPS contains its own energy source (batteries). The output receptacles may carry live voltage even when the UPS is not connected to an AC supply.
- For 230V models, the output receptacles may remain electrically live. If the input power source in your application is wired line-to-neutral (as in most European applications), the voltage to the output receptacles is 0V. With line-to-line input wiring, the voltage to the output receptacles is 115V (measured from line-to-ground or line-to-neutral, depending on the UPS wiring).
- Do not remove or unplug the input cord when the UPS is turned on. This removes the safety ground from the UPS and the equipment connected to the UPS.
- To reduce the risk of fire or electric shock, install this UPS in a temperature and humidity controlled, indoor environment, free of conductive contaminants. Ambient temperature must not exceed 40°C (104°F). Do not operate near water or excessive humidity (95% maximum).
- To comply with international standards and wiring regulations, the total equipment connected to the output of this UPS must not have an earth leakage current greater than 3.5 milliamperes.

CAUTION

- Batteries can present a risk of electrical shock or burn from high short-circuit current. Observe proper precautions. Servicing should be performed by qualified service personnel knowledgeable of batteries and required precautions. Keep unauthorized personnel away from batteries.
- Proper disposal of batteries is required. Refer to your local codes for disposal requirements.
- Never dispose of batteries in a fire. Batteries may explode when exposed to flame.

Sikkerhedsanvisninger

VIGTIGE SIKKERHEDSANVISNINGER GEM DISSE ANVISNINGER

Denne manual indeholder vigtige instruktioner, som skal følges under installation og vedligeholdelse af UPS'en og batterierne. Læs venligst alle instruktioner inden betjening af udstyret og gem denne manual mhp. fremtidige opslag.

FARE

Denne UPS indeholder LIVSFARLIG HØJSPÆNDING. Alle reparationer og vedligeholdelse bør kun udføres af en AUTORISERET SERVICETEKNIKER. Ingen af UPS'ens indvendige dele kan repareres af brugeren.

ADVARSEL!

- Denne UPS indeholder sin egen energikilde (batterier). Udgangsstikkene kan endog være strømførende, når UPS'en ikke er koblet til en vekselstrømsforsyning.
- På 230V-modeller kan udgangsstikkene være strømførende. Hvis ledningsføringen til indgangsstrømkilden på din enhed er fase-til-neutral (som på de fleste europæiske enheder), er spændingen til udgangsstikkene 0V. Med en fase-til-fase indgangsledningsføring er spændingen til udgangsstikkene 115V (målt fra fase-til-jord eller fase-til-neutral, afhængig af UPS-ledningsføringen).
- Netledningen må ikke fjernes og stikket må ikke trækkes ud, mens UPS'en er tændt. Dette fjerner sikkerhedsjorden fra UPS'en og fra det udstyr, der er sat til.
- Installér denne UPS i et temperatur- og fugtighedskontrolleret indendørsmiljø, frit for ledende forureningsstoffer for at formindske risikoen for brand og elektrisk stød. Rumtemperaturen må ikke overstige 40°C. UPS'en bør ikke betjenes nær vand eller høj fugtighed (maksimalt 95%).
- I overensstemmelse med internationale normer og bestemmelser for el-installation må det udstyr, der er forbundet til udgangen af denne UPS, tilsammen ikke overskride en jordafdelingsspænding på mere end 3,5 milliampere.

ADVARSEL

- Batterierne kan give risiko for elektrisk stød eller brandsår forårsaget af høj kortslutningsstrøm. Overhold gældende forsigtighedsregler. Servicering skal udføres af kvalificeret servicepersonale med kendskab til batterier og gældende forsigtighedsregler. Hold uautoriseret personale væk fra batterierne.
- Korrekt bortskaffelse af batterier er påkrævet. Overhold gældende lokale regler for bortskaffelsesprocedurer.
- Skaf dig aldrig af med batterierne ved at brænde dem. Batterierne kan eksplodere ved åben ild.

Belangrijke Veiligheidsinstructies

BELANGRIJKE VEILIGHEIDSINSTRUCTIES BEWAAR DEZE INSTRUCTIES

Deze handleiding bevat belangrijke instructies die u dient te volgen tijdens de installatie en het onderhoud van de UPS en de accu's. Lees alle instructies voordat u de apparatuur in bedrijf neemt en bewaar deze handleiding als naslagwerk.

GEVAAR

Deze UPS bevat LEVENSGEVAARLIJKE ELEKTRISCHE SPANNING. Alle reparaties en onderhoud dienen UITSLUITEND DOOR ERKEND SERVICEPERSONEEL te worden uitgevoerd. Er bevinden zich GEEN ONDERDELEN in de UPS die DOOR DE GEBRUIKER kunnen worden GEREPAREERD.

WAARSCHUWING

- Deze UPS bevat een eigen energiebron (batterijen). De uitgangscontactdoos kan onder spanning staan, zelfs wanneer de UPS niet is aangesloten op de netspanning.
- Bij de modellen van 230V kan de uitgangscontactdoos onder spanning blijven staan. Als de bedrading van de ingangsspanningsbron in uw systeem loopt van fase naar aarde (zoals bij de meeste Europese systemen) dan bedraagt de spanning op de uitgangscontactdozen 0 V. Als de ingangsbedrading loopt van fase naar fase dan bedraagt de spanning op de uitgangscontactdozen 115V (gemeten tussen fase en aarde of tussen fase en neutraal, afhankelijk van de UPS-bedrading).
- Verwijder de ingangsnoer niet of haal de stekker van de ingangsnoer er niet uit terwijl de UPS aan staat. Hierdoor zou de UPS en uw aangesloten apparatuur geen aardebeveiliging meer hebben.

- Teneinde de kans op brand of elektrische schok te verminderen dient deze UPS in een gebouw met temperatuur- en vochtigheidregeling te worden geïnstalleerd, waar geen geleidende verontreinigingen aanwezig zijn. De omgevingstemperatuur mag 40°C niet overschrijden. Niet gebruiken in de buurt van water of bij zeer hoge vochtigheid (max. 95%).
- Om aan de internationale normen en bedradingsvoorschriften te voldoen mag de gehele apparatuur die op de uitgang van deze UPS is aangesloten, geen aardlekstroom van meer dan 3,5 milliampère hebben.

OPGELET

- Batterijen leveren gevaar op voor elektrische schokken en kunnen brandwonden veroorzaken door een grote kortsluitstroom. Neem de juiste voorzorgsmaatregelen in acht. Het onderhoud moet worden uitgevoerd door bevoegde onderhoudsmonteurs die verstand hebben van accu's en op de hoogte zijn van de vereiste voorzorgsmaatregelen. Houd onbevoegden uit de buurt van de accu's.
- De batterijen moeten op de juiste wijze worden opgeruimd. Raadpleeg hiervoor uw plaatselijke voorschriften.
- Nooit batterijen in het vuur gooien. De batterijen kunnen ontploffen.

Tarkeita Turvaohjeita

TÄRKEITÄ TURVAOHJEITA - SUOMI
SÄILYTÄ NÄMÄ OHJEET

Tämä käyttöohje sisältää tärkeitä ohjeita, joita on noudatettava UPS-virtalähteen ja akkujen asennuksen ja huollon yhteydessä. Lue kaikki ohjeet ennen laitteiston käyttöä ja säilytä ohje myöhempää tarvetta varten.

VAARA

Tämä UPS sisältää HENGENVAARALLISIA JÄNNITTEITÄ. Kaikki korjaukset ja huollot on jätettävä VAIN VALTUUTETUN HUOLTOHENKILÖN TOIMEKSI. UPS ei sisällä MITÄÄN KÄYTTÄJÄN HUOLLETTAVIA OSIA.

VAROITUS

- Tässä UPS-virtalähteessä on oma energianlähde (akut). Lähtövastakkeissa voi olla jännite, vaikka UPS-virtalähdettä ei ole kytketty verkkovirtaan.
- 230V -malleissa lähtövastakkeissa voi säilyä jännite. Jos sovelluksen tulovirtalähde on johdotettu linjasta neutraaliin (kuten useimmissa eurooppalaisissa sovelluksissa) lähtövastakkeiden jännite on 0 V. Linjasta linjaan –tulojohdotuksessa lähtövastakkeiden jännite on 115V (mitataan linjasta maahan tai linjasta neutraaliin, UPS-virtalähteen johdotuksesta riippuen).
- Älä poista tai irrota sisääntulojohtoa, kun UPS on kytkettynä. Tämä poistaa turvamaadoituksen UPS-laitteesta ja siihen liitetystä laitteistosta.
- Vähentääksesi tulipalon ja sähköiskun vaaraa asenna tämä UPS sisätiloihin, joissa lämpötila ja kosteus on säädettävissä ja joissa ei ole virtaa johtavia epäpuhtauksia. Ympäristön lämpötila ei saa ylittää 40 °C. Älä käytä lähellä vettä ja vältä kosteita tiloja (95 % maksimi).
- Kansainväliset normit ja johdotusmääräykset vaativat, että kaikkien tämän UPS-laitteen ulostulokytkentöjen yhteinen maavuotovirta ei ylitä 3,5 milliampeeria (mA).

VARO

- Akut voivat aiheuttaa sähköiskun tai palovammojen vaaran johtuen suuresta oikosulkuvirrasta. Noudata kaikkia asianmukaisia varotoimia. Laitteen saa huoltaa vain ammattitaitoinen huoltohenkilökunta, joka tuntee akut ja niihin liittyvät varotoimet. Älä päästä valtuuttamatonta henkilöstöä lähelle akkuja.
- Akusto täytyy hävittää säädösten mukaisella tavalla. Noudata paikallisia määräyksiä.
- Älä koskaan heitä akkuja tuleen. Ne voivat räjähtää.

Consignes de sécurité

CONSIGNES DE SÉCURITÉ IMPORTANTES CONSERVER CES INSTRUCTIONS

Ce manuel comporte des instructions importantes que vous êtes invité à suivre lors de toute procédure d'installation et de maintenance des batteries et de l'onduleur. Veuillez consulter entièrement ces instructions avant de faire fonctionner l'équipement et conserver ce manuel afin de pouvoir vous y reporter ultérieurement.

DANGER!

Cet onduleur contient des TENSIONS MORTELLES. Toute opération d'entretien et de réparation doit être EXCLUSIVEMENT CONFIÉE A UN PERSONNEL QUALIFIÉ AGRÉÉ. AUCUNE PIÈCE RÉPARABLE PAR L'UTILISATEUR ne se trouve dans l'onduleur.

AVERTISSEMENT!

- Cette onduleur possède sa propre source d'alimentation (batteries). Il est possible que les prises de sortie soient sous tension même lorsque l'onduleur n'est pas connectée à une alimentation CA.
- En ce qui concerne les modèles 230 V, il est possible que les prises de sortie restent sous tension. Si la source d'alimentation de votre application est câblée phase et neutre (comme dans la majorité des applications européennes), la tension vers les prises de sortie est de 0 V. Avec un câblage d'entrée phase à phase, la tension vers les prises de sortie est de 115 V (mesurée entre phase et terre ou phase et neutre suivant le câblage de l'onduleur).
- Ne pas retirer le cordon d'alimentation lorsque l'onduleur est sous tension sous peine de supprimer la mise à la terre de l'onduleur et du matériel connecté.
- Pour réduire les risques d'incendie et de décharge électrique, installer l'onduleur uniquement à l'intérieur, dans un lieu dépourvu de matériaux conducteurs, où la température et l'humidité ambiantes sont contrôlées. La température ambiante ne doit pas dépasser 40 °C. Ne pas utiliser à proximité d'eau ou dans une atmosphère excessivement humide (95 % maximum).
- Afin d'être conforme aux normes et règlements internationaux de câblage, le courant de fuite à la terre de la totalité du matériel branché sur la sortie de l'onduleur ne doit pas dépasser 3,5 mA.

ATTENTION!

- Les batteries peuvent présenter un risque de choc électrique ou de brûlure provenant d'un courant de court-circuit haute intensité. Observez les précautions appropriées. L'entretien doit être réalisé par du personnel qualifié connaissant bien les batteries et les précautions nécessaires. N'autorisez aucun personnel non qualifié à manipuler les batteries.
- Une mise au rebut réglementaire des batteries est obligatoire. Consulter les règlements en vigueur dans votre localité.
- Ne jamais jeter les batteries au feu. L'exposition aux flammes risque de les faire exploser.

Sicherheitswarnungen

WICHTIGE SICHERHEITSANWEISUNGEN AUFBEWAREN

Dieses Handbuch enthält wichtige Anweisungen, die Sie während der Installation und Wartung des USV (Unterbrechungsfreies Stromversorgungssystem) und der Batterien befolgen müssen. Bitte lesen Sie alle Anweisungen des Handbuches bevor sie mit dem Gerät arbeiten. Bewaren Sie das Handbuch zum Nachlesen auf.

WARNUNG

Die USV führt lebensgefährliche Spannungen. Alle Reparatur- und Wartungsarbeiten sollten nur von Kundendienstfachleuten durchgeführt werden. Die USV enthält keine vom Benutzer zu wartenden Komponenten.

ACHTUNG

- Dieses USV (Unterbrechungsfreies Stromversorgungssystem) enthält eine eigene Energiequelle (Batterien). Die Ausgangssteckdosen können Spannung führen, auch wenn das USV nicht an eine Wechselstromquelle angeschlossen ist.
- Bei Modellen mit 230 Volt können die Ausgangssteckverbinder stromführend bleiben. Wenn die Eingangsstromquelle in Ihrer Anlage mit Masseleitung verkabelt ist (wie in den meisten europäischen Anlagen), beträgt die Spannung an den Ausgangssteckverbindern 0 Volt. Bei einer Verkabelung mit Außenleitern beträgt die Spannung an den Ausgangssteckverbindern 115 Volt (gemessen von Leitung zu Masse oder Leitung zu Masseleiter, abhängig von der USV-Verkabelung.
- Das Eingangskabel nicht entfernen oder abziehen, während die USV eingeschaltet ist, weil hierdurch die Sicherheitserdung von der USV und den daran angeschlossenen Geräten entfernt wird.

- Um die Brand- oder Elektroschockgefahr zu verringern, diese USV nur in Gebäuden mit kontrollierter Temperatur und Luftfeuchtigkeit installieren, in denen keine leitenden Schmutzstoffen vorhanden sind. Die Umgebungstemperatur darf 40°C nicht übersteigen. Die USV nicht in der Nähe von Wasser oder in extrem hoher Luftfeuchtigkeit (max. 95 %) betreiben.
- Um internationale Normen und Verdrahtungsvorschriften zu erfüllen, dürfen die an den Ausgang dieser USV angeschlossenen Geräte zusammen einen Erdableitstrom von insgesamt 3,5 Milliampere nicht überschreiten.

VORSICHT!

- Batterien können das Risiko eines elektrischen Schlags bergen oder durch hohen Kurzschlussstrom in Brand geraten. Die richtigen Vorsichtsmaßnahmen beachten. Die Wartung muss von qualifiziertem Wartungspersonal durchgeführt werden, das im Umgang mit Batterien geübt ist und über gute Kenntnisse der erforderlichen Vorsichtsmaßnahmen verfügt. Nicht autorisiertes Personal von Batterien fern halten.
- Die Batterien müssen ordnungsgemäß entsorgt werden. Hierbei sind die örtlichen Bestimmungen zu beachten.
- Batterien niemals verbrennen, da sie explodieren können.

Avvisi di sicurezza

IMPORTANTI ISTRUZIONI DI SICUREZZA CONSERVARE QUESTE ISTRUZIONI

Il presente manuale contiene importanti istruzioni da seguire durante l'installazione e la manutenzione dell'UPS e delle batterie. Leggere integralmente le istruzioni prima di utilizzare l'apparecchiatura e conservare il presente manuale per futuro riferimento.

PERICOLO

La TENSIONE contenuta in questo gruppo statico di continuità è LETALE. Tutte le operazioni di riparazione e di manutenzione devono essere effettuate ESCLUSIVAMENTE DA PERSONALE TECNICO AUTORIZZATO. All'interno del gruppo statico di continuità NON vi sono PARTI RIPARABILI DALL'UTENTE.

AVVERTENZA

- L'UPS contiene la propria fonte di energia (batterie). Le prese d'uscita possono essere sotto tensione anche quando l'UPS non è collegato all'alimentazione elettrica CA.
- Nei modelli da 230 V è possibile che le prese d'uscita rimangano sotto tensione. Se la fonte di alimentazione in entrata dell'installazione è costituita da un collegamento linea-neutro (come accade nella maggior parte delle installazioni europee), la tensione delle prese d'uscita è pari a 0 V. Con un cablaggio in entrata del tipo linea-linea, la tensione sulle prese d'uscita è 115 V (con misurazione effettuata da linea a terra o da linea a neutro in base al cablaggio dell'UPS).
- Non rimuovere nè scollegare il cavo di ingresso quando il gruppo statico di continuità è acceso poichè in tal modo si disattiverebbe il collegamento a terra di sicurezza del gruppo statico di continuità e dell'apparecchiatura ad esso collegata.
- Per ridurre il rischio di incendio o di scossa elettrica, installare il gruppo statico di continuità in un ambiente interno a temperatura ed umidità controllata, privo di agenti contaminanti conduttivi. La temperatura ambiente non deve superare i 40°C. Non utilizzare l'unità in prossimità di acqua o in presenza di umidità eccessiva (95% max).
- Per conformità con gli standard internazionali e con le norme in merito al cablaggio, tutta l'apparecchiatura collegata con l'uscita del gruppo statico di continuità non deve avere una corrente di dispersione di terra superiore a 3,5 milliampere.

ATTENZIONE

- Le batterie possono comportare un rischio di scossa elettrica o di ustione in seguito a un'elevata corrente di corto circuito. Osservare le dovute precauzioni. L'assistenza deve essere eseguita da personale qualificato esperto di batterie e delle necessarie precauzioni. Tenere il personale non autorizzato lontano dalle batterie.
- Le batterie devono essere smaltite in modo corretto. Per i requisiti di smaltimento fare riferimento alle disposizioni locali.
- Non gettare mai le batterie nel fuoco poichè potrebbero esplodere se esposte alle fiamme.

Viktig Sikkerhetsinformasion

VIKTIGE SIKKERHETSINSTRUKSJONER
GJEM DISSE INSTRUKSJONENE

Denne håndboken inneholder viktige instruksjoner som du bør overholde ved montering og vedlikehold av UPS-enheten og batteriene. Les alle instruksjoner før utstyret tas i bruk, og gjem håndboken til fremtidig referanse.

FARLIG

Denne UPS'en inneholder LIVSFARLIGE SPENNINGER. All reparasjon og service må kun utføres av AUTORISERT SERVICEPERSONALE. BRUKERE KAN IKKE UTFØRE SERVICE PÅ NOEN AV DELENE i UPS'en.

FARLIG

- UPS-enheten inneholder sin egen energikilde (batterier). Utgangsstikkene kan være strømførende selv når UPS-enheten ikke er koblet til et strømuttak.
- Utgangsstikkene kan være strømførende for 230V modellene. Spenningen til utgangsstikkene vil være 0 V dersom din enhets strømkilde er fase-til-nøytral (som på de fleste europeiske enheter). Med ledningsført fase-til-fase inngang vil spenningen til utgangsstikkene være 115V (målt fra fase-til-jord eller fase-til-nøytral, avhenging av UPS-ledningsføringen).
- Strømforsyningskabelen må ikke fjernes eller trekkes ut når UPS'en er på, slik at ikke sikkerhetsjordingen fjernes fra UPS'en og det utstyret som er forbundet med den.
- For å redusere fare for brann eller elektriske støt, bør denne UPS'en installeres i et innendørs miljø med kontrollert temperatur og luftfuktighet som er fritt for ledende, forurensende stoffer. Romtemperaturen må ikke overskride 40°C. Den må ikke brukes i nærheten av vann eller ved meget høy luftfuktighet (95% maks.).
- Alt utstyr som er forbundet med utgangen av denne UPS'en må ikke ha en sterkere total lekkasjestrøm enn 3,5 milliampere for å være i overensstemmelse med internasjonale standarder og forkablingsbestemmelser.

FORSIKTIG

- Batterier kan utgjøre en fare for elektrisk støt eller brannsår pga. høy kortsluttingsstrøm. Treff passende forholdsregler. Service bør utføres av kvalifisert servicepersonale med kjennskap til batterier og nødvendige forholdsregler. Hold uautorisert personale borte fra batteriene.
- Batterier må fjernes på korrekt måte. Se lokale forskrifter vedrørende krav om fjerning av batterier.
- Kast aldri batterier i flammer, da de kan eksplodere, hvis de utsettes for åpen ild.

Regulamentos de Segurança

INSTRUÇÕES DE SEGURANÇA IMPORTANTES GUARDE ESTAS INSTRUÇÕES

Este manual contém instruções importantes que devem ser seguidas durante a instalação e manutenção do no-break e das baterias. Leia todas as instruções antes de operar o equipamento e guarde este manual para consultá-lo futuramente.

CUIDADO

A UPS contém VOLTAGEM MORTAL. Todos os reparos e assistência técnica devem ser executados SOMENTE POR PESSOAL DA ASSISTÊNCIA TÉCNICA AUTORIZADO. Não há nenhuma PEÇA QUE POSSA SER REPARADA PELO USUÁRIO dentro da UPS.

ADVERTÊNCIA

- Este no-break possui sua própria fonte de energia (baterias). As tomadas de saída podem estar energizadas mesmo que o no-break não esteja conectado a uma fonte de energia elétrica.
- Nos modelos 230V, pode ser que as tomadas de saída permaneçam energizadas. Se a alimentação da sua aplicação for do tipo fase-neutro (como ocorre na maioria das aplicações na Europa), a tensão das tomadas de saída é de 0 V. Com a alimentação fase-fase, a tensão das tomadas de saída é de 115V (medida como fase-terra ou fase-neutro, dependendo da instalação elétrica do no-break).
- Não remova ou desconecte o cabo de entrada quando a UPS estiver ligada. Isto removerá o aterramento de segurança da UPS e do equipamento conectado.

- Para reduzir o risco de incêndios ou choques elétricos, instale a UPS em ambiente interno com temperatura e umidade controladas e livres de contaminadores condutíveis. A temperatura ambiente não deve exceder 40°C. Não opere próximo a água ou em umidade excessiva (máx: 95%).
- Para estar de acordo com os padrões internacionais e os regulamentos de fiação, o equipamento total conectado à saída desta UPS não deve ter uma corrente de fuga à terra maior que 3,5 miliampères.

PERIGO

- As baterias podem oferecer risco de choque elétrico ou queimadura, ocasionados por alta tensão com possibilidade de curto-circuito. Tome as precauções adequadas. A manutenção deve ser realizada por pessoal qualificado, com conhecimento sobre baterias e ciente das precauções exigidas. Mantenha o pessoal não autorizado afastado das baterias.
- Siga as instruções apropriadas ao desfazer-se das baterias. Consulte os códigos do local para maiores informações sobre os regulamentos de descarte de produtos.
- Nunca jogue as baterias no fogo, porque há risco de explosão.

Предупреждения по мерам безопасности

ВАЖНЫЕ УКАЗАНИЯ ПО МЕРАМ БЕЗОПАСНОСТИ СОХРАНИТЕ ЭТИ УКАЗАНИЯ

В данном руководстве содержатся важные инструкции по установке и обслуживанию источника бесперебойного питания (ИБП) и батарей. Перед работой с оборудованием прочтите все инструкции. Сохраните данное руководство для дальнейшего использования.

ОПАСНО

В данном ИБП имеются СМЕРТЕЛЬНО ОПАСНЫЕ НАПРЯЖЕНИЯ. Все работы по ремонту и обслуживанию должны выполняться ТОЛЬКО УПОЛНОМОЧЕННЫМ ОБСЛУЖИВАЮЩИМ ПЕРСОНАЛОМ. Внутри ИБП нет узлов, ОБСЛУЖИВАЕМЫХ ПОЛЬЗОВАТЕЛЕМ.

ПРЕДУПРЕЖДЕНИЕ

- В данном ИБП установлены собственные источники энергии (батареи). На выходных розетках может быть напряжение, даже если ИБП не подключен к сети переменного тока.
- На выходных розетках моделей с напряжением 230 В может быть напряжение. Если устройство рассчитано на тип подключения “фаза-нейтраль” (как большинство устройств, изготавливаемых в Европе), напряжение на выходных розетках равно 0 В. При типе подключения “фаза-фаза” напряжение на выходных розетках составляет 115 В (при измерении “фаза-земля” или “фаза-нейтраль”, в зависимости от электрической схемы ИБП).
- Не отсоединяйте сетевой шнур и не извлекайте его вилку из розетки при включенном ИБП. При этом защитное заземление отключается от ИБП и от оборудования, подключенного к ИПБ.
- Для снижения опасности пожара или поражения электрическим током устанавливайте ИБП в закрытом помещении с контролируемыми температурой и влажностью, в котором отсутствуют проводящие загрязняющие вещества. Температура окружающего воздуха не должна превышать 40°C. Не эксплуатируйте устройство около воды или в местах с повышенной влажностью (макс. 95%).
- Для обеспечения соблюдения требований международных стандартов и требований к разводке электрических цепей, суммарная величина тока утечки на землю всего оборудования, подключенного к выходу ИБП, не должна превышать 3,5 миллиампера.

ОСТОРОЖНО

- Высокое напряжение, вызванное коротким замыканием в батарее, может привести к поражению электрическим током или ожогу. Соблюдайте меры предосторожности. Техническое обслуживание должно осуществляться квалифицированным персоналом по работе с источниками питания, знакомым с мерами предосторожности. Не допускайте к работе с батареями посторонних.
- Необходимо соблюдать правила утилизации аккумуляторов. Обратитесь к местным нормативным актам за информацией о требованиях к утилизации.
- Никогда не бросайте аккумуляторы в огонь. Аккумуляторы могут взорваться под воздействием огня.

Advertencias de Seguridad

INSTRUCCIONES DE SEGURIDAD IMPORTANTES GUARDE ESTAS INSTRUCCIONES

Este manual contiene instrucciones importantes que debe seguir durante la instalación y el mantenimiento del SIE y de las baterías. Por favor, lea todas las instrucciones antes de poner en funcionamiento el equipo y guarde este manual para referencia en el futuro.

PELIGRO

Este SIE contiene VOLTAJES MORTALES. Todas las reparaciones y el servicio técnico deben ser efectuados SOLAMENTE POR PERSONAL DE SERVICIO TÉCNICO AUTORIZADO. No hay NINGUNA PARTE QUE EL USUARIO PUEDA REPARAR dentro del SIE.

ADVERTENCIA

- Este SIE contiene su propia fuente de energía (baterías). Los receptáculos de salida pueden transportar voltaje activo aun cuando el SIE no esté conectado con una fuente de CA.
- Para los modelos 230V, es posible que los receptáculos de salida permanezcan eléctricamente activos. Si la fuente de energía de entrada de su aplicación está cableada de línea a neutro (como la mayoría de las aplicaciones europeas), el voltaje a los receptáculos de salida es 0V. Con cableado de entrada de línea a línea, el voltaje hacia los receptáculos de salida es 115V (medido de línea a tierra o de línea a neutro, lo que dependerá del cableado del SIE).
- No retire o desenchufe el cable de entrada mientras el SIE se encuentre encendido. Esto suprime la descarga a tierra de seguridad del SIE y de los equipos conectados al SIE.
- Para reducir el riesgo de incendio o de choque eléctrico, instale este SIE en un lugar cubierto, con temperatura y humedad controladas, libre de contaminantes conductores. La temperatura ambiente no debe exceder los 40°C. No trabaje cerca del agua o con humedad excesiva (95% máximo).
- Para cumplir con los estándares internacionales y las normas de instalación, la totalidad de los equipos conectados a la salida de este SIE no debe tener una intensidad de pérdida a tierra superior a los 3,5 miliamperios.

PRECAUCIÓN

- Las baterías pueden constituir un riesgo de descarga eléctrica o quemaduras por corriente alta de corto circuito. Adopte las precauciones debidas. Personal calificado de servicio que conozca de baterías y esté al tanto de las precauciones requeridas debe darle servicio al equipo. Mantenga al personal no autorizado alejado de las baterías.
- Es necesario desechar las baterías de un modo adecuado. Consulte las normas locales para conocer los requisitos pertinentes.
- Nunca deseche las baterías en el fuego. Las baterías pueden explotar si se las expone a la llama.

Säkerhetsföreskrifter

VIKTIGA SÄKERHETSFÖRESKRIFTER SPARA DESSA FÖRESKRIFTER

Den här anvisningen innehåller viktiga instruktioner som du ska följa under installation och underhåll av UPS-enheten och batterierna. Läs alla instruktioner innan du använder utrustningen och spara den här anvisningen för framtida referens.

FARA

Denna UPS-enhet innehåller LIVSFARLIG SPÄNNING. ENDAST AUKTORISERAD SERVICEPERSONAL får utföra reparationer eller service. Det finns inga delar som ANVÄNDAREN KAN UTFÖRA SERVICE PÅ inuti UPS-enheten.

VARNING

- Den här UPS-enheten innehåller sin egen energikälla (batterier). Uttagen kan vara spänningsförande även då UPS-enheten inte är ansluten till spänningsnätet.
- På modellerna 230 V kan de utgående uttagen fortfarande vara strömförande. Om den ingående strömkällan i din applikation är kopplad ledare-till-nolla (det vanligaste i Europa) är spänningen till de utgående uttagen 0 V. Är den ingående strömkällan kopplad ledare-till-ledare är spänningen i de utgående uttagen 115 V (uppmätt från ledare-till-jord eller ledare-till-nolla beroende på UPS:ens anslutning).
- Ta aldrig bort nätsladden när UPS-enheten är påslagen. Detta tar bort skyddsjordningen från både UPS-enheten och den anslutna utrustningen.

- Minska risken för brand eller elektriska stötar genom att installera denna UPS-enhet inomhus, där temperatur och luftfuktighet är kontrollerade och där inga ledande föroreningar förekommer. Omgivande temperatur får ej överstiga 40°C. Använd inte utrustningen nära vatten eller vid hög luftfuktighet (max 95 %).
- För att överensstämma med internationell standard och installationsföreskrifter får inte den totala utrustning som anslutits till uttagen på denna UPS-enhet ha läcksström som överstiger 3,5 milliampere.

VIKTIGT

- Batterierna kan innebära en risk för elektrisk stöt eller brännskada från kortsluten starkström. lakttag lämpliga försiktighetsåtgärder. Service ska utföras av utbildad servicepersonal med kunskap om batterierna och nödvändiga försiktighetsåtgärder. Håll ej behörig personal borta från batterierna.
- Batterierna måste avyttras enligt anvisningarna i lokal lagstiftning.
- Använda batterier får aldrig brännas upp. De kan explodera.

Chapter 3 Installation

This section explains:

- Equipment inspection
- UPS internal battery connection
- UPS setup and installation, including Extended Battery Modules (EBMs)
- Remote power-off (RPO) or remote on/off (ROO) installation
- UPS rear panels

Inspecting the Equipment

If any equipment has been damaged during shipment, keep the shipping cartons and packing materials for the carrier or place of purchase and file a claim for shipping damage. If you discover damage after acceptance, file a claim for concealed damage.

To file a claim for shipping damage or concealed damage: 1) File with the carrier within 15 days of receipt of the equipment; 2) Send a copy of the damage claim within 15 days to your service representative.

NOTE *Check the battery recharge date on the shipping carton label. If the date has passed and the batteries were never recharged, do not use the UPS. Contact your service representative.*

Checking the Accessory Kit

Verify that the following additional items are included with the UPS:

Table 1. UPS Accessory Kit

Item	Description
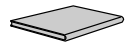	UPS user's guide or CD
	UPS front cover
	USB cable
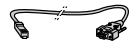	RS-232 serial cable
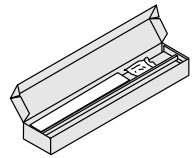	Rackmounting kit for 19-inch (48 cm) bays
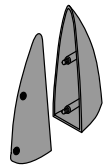	2U models only. Two pedestals with screws for tower position
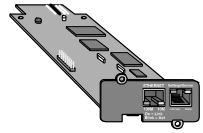	Optional. Network Management Card

The high-voltage models include the following additional items:

Table 2. Additional High-Voltage Model Accessory Items

Item	Description
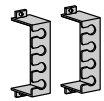	Two cord-retention brackets
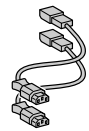	Two equipment power cords
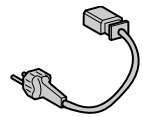	2500–3000 VA models only. Power cord

If you ordered an optional EBM, verify that the following items are included with the EBM:

Table 3. EBM Accessory Items

Item	Description
	EBM user's guide
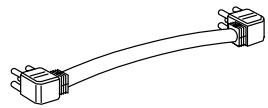	EBM cable
	EBM communication cable
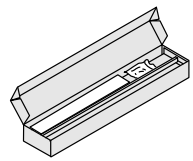	Rackmounting kit for 19-inch (48 cm) bays
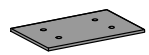	Joining bracket and screws for tower position

Connecting the UPS Internal Battery

To ensure proper battery operation:

1. Verify that the UPS is off and unplugged.
2. Connect the internal battery connectors by firmly pressing the connectors together (see Figure 2).

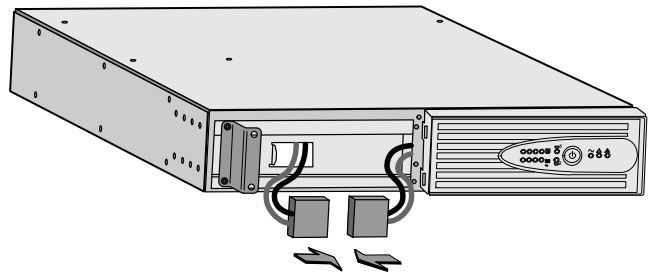

Figure 2. Connecting the Internal Battery Connectors

NOTE *A small amount of arcing may occur when connecting the batteries. This is normal and does not damage the unit or present any safety concern.*

3. Install the UPS front cover and snap into place (see Figure 3).

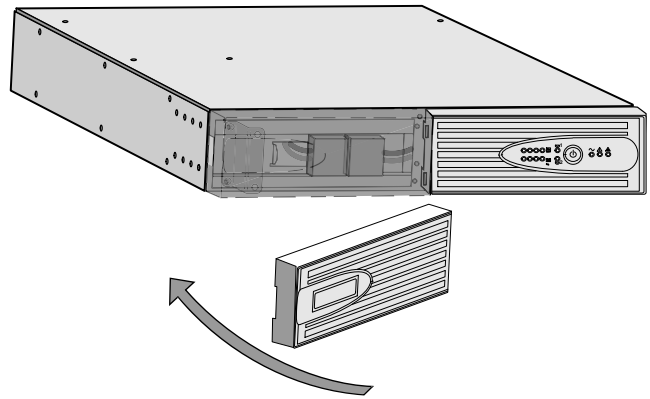

Figure 3. Installing the UPS Front Cover

4. Continue to the following section, “UPS Setup.”

UPS Setup

The Eaton 5130 UPS is designed for flexible configurations and can be installed in a rack or as a standalone cabinet.

If you are installing the UPS in a rack, continue to the following section, “Rackmount Setup;” otherwise, continue to “Tower Setup” on page 25.

Rackmount Setup

The rail kit can be mounted in 19-inch panel (48 cm) racks from 24 to 30 inches (61 to 76 cm) deep and includes:

- Left and right sliding rail assemblies
- (12) M5 washers
- (12) M5 × 12 mm Phillips®-head screws
- (8) M4 × 5 mm Phillips-head screws
- (2) mounting brackets with handles

Required Tools

To assemble the components, a #2 Phillips screwdriver may be needed.

Installing the Rail Kit

CAUTION

The UPS and EBM are heavy (see page 54). A minimum of two people are required to lift the cabinets into the rack.

NOTE *Mounting rails are required for each UPS and EBM cabinet. If mounting rails are not already installed in your rack, contact your local distributor to order rail kits.*

To install the rail kit:

1. Adjust the rail size for the depth of your rack.
2. Select the proper holes in the rail for positioning the UPS in the desired location in the rack.
3. Using two M5 washers and two M5 screws, attach the rail to the rear of the rack (see Figure 4).
4. Secure the rail to the front of the rack with two M5 washers and two M5 screws.
5. Repeat Steps 3 and 4 for the other rail.

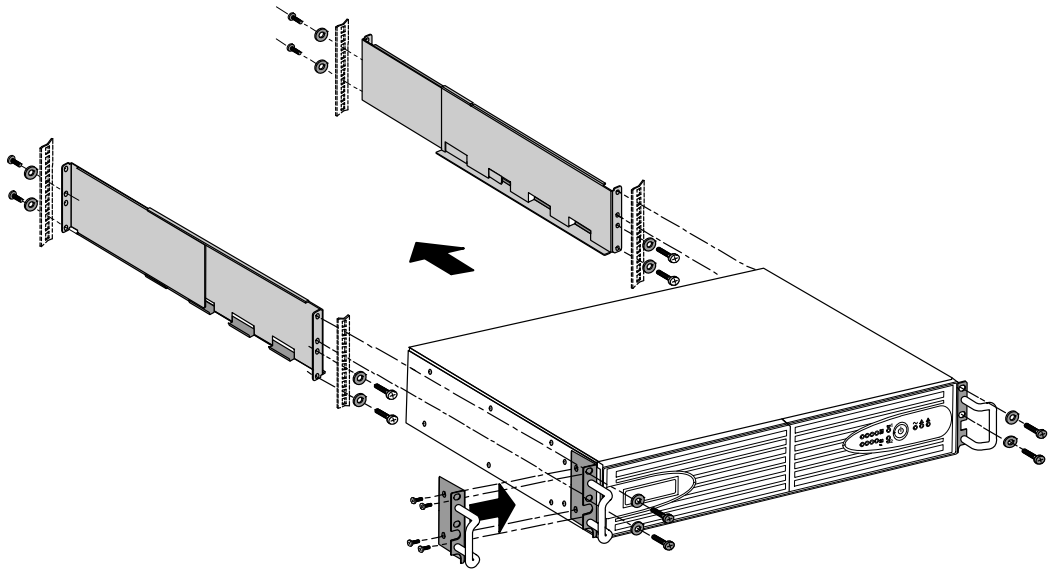

Figure 4. Installing the Rail Kit

6. Place the UPS on a flat, stable surface with the front of the UPS facing you.

7. Attach the supplied mounting brackets to the cabinet and secure with four M4 screws on each side (see Figure 4).

8. If installing optional EBMs, repeat Steps 1 and 7 for each cabinet.

NOTE *The UPS and EBMs MUST be installed at the bottom of the rack. If placed in a rack with existing equipment, the rack must be reconfigured to allow the UPS installation at the bottom of the rack.*

NOTE *The EBMs must be installed below the UPS.*

9. Slide the UPS and any optional EBMs into the rack.

10. Secure the front of the cabinet to the rack using two M5 washers and two M5 screws on each side (see Figure 4).

11. Continue to "Installing the UPS" on page 28.

Tower Setup

The setup varies depending on the size of the cabinet you are installing:

1. Carefully position the cabinet upright with the air vents at the top (see Figure 5).

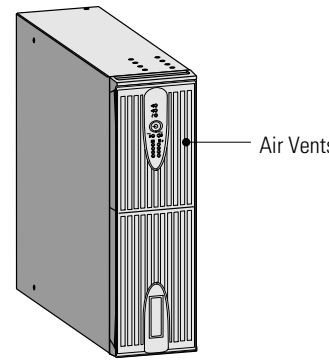

Figure 5. 3U Cabinet

2. **For one 2U cabinet,** the pedestals must be installed. Continue to Step 3.

   For one 3U cabinet, continue to "Installing the UPS" on page 28.

   For two or more cabinets, the joining brackets must be installed. Skip to Step 5.

3. Align the pedestals with the screw holes on the sides of the UPS cabinet. Secure the pedestals with the captive screws.

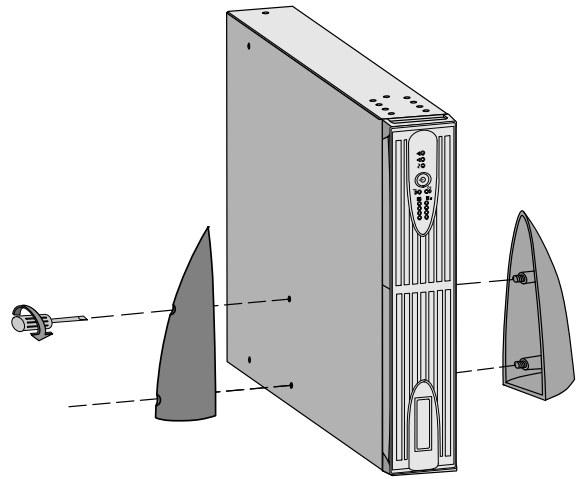

Figure 6. Installing UPS Pedestals (for One 2U Cabinet)

4. Continue to the following section, "Installing the UPS."

5. Align each joining bracket with the adjacent cabinet screw holes and secure with the supplied screws (see Figure 7).

NOTE *Joining brackets are required for installations with two or more cabinets.*

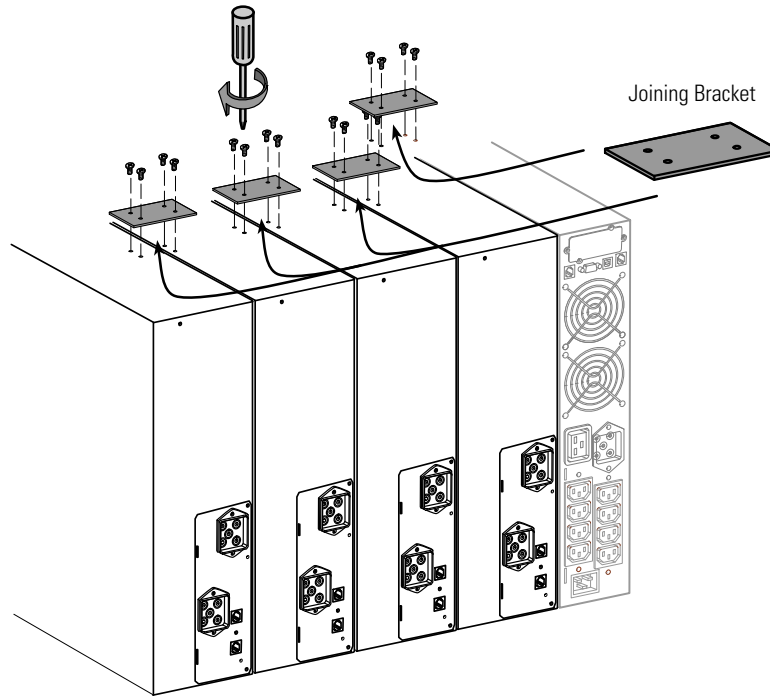

Figure 7. Installing the Joining Brackets

6. If installing additional EBMs, repeat Step 5 for each cabinet.

7. Continue to the following section, "Installing the UPS."

Installing the UPS

NOTE *Do not make unauthorized changes to the UPS or accessories; otherwise, damage may occur to your equipment and void your warranty.*

See "UPS Rear Panels" on page 33 for the rear panel of each model.

To install the UPS and optional EBMs:

1. If installing an optional EBM, continue to Step 2; otherwise, continue to Step 3.
2. Plug the EBM cable into the battery connector. Plug the EBM communication cable into the RJ-11 port. See Figure 8.

   Up to four EBMs may be connected to the UPS.

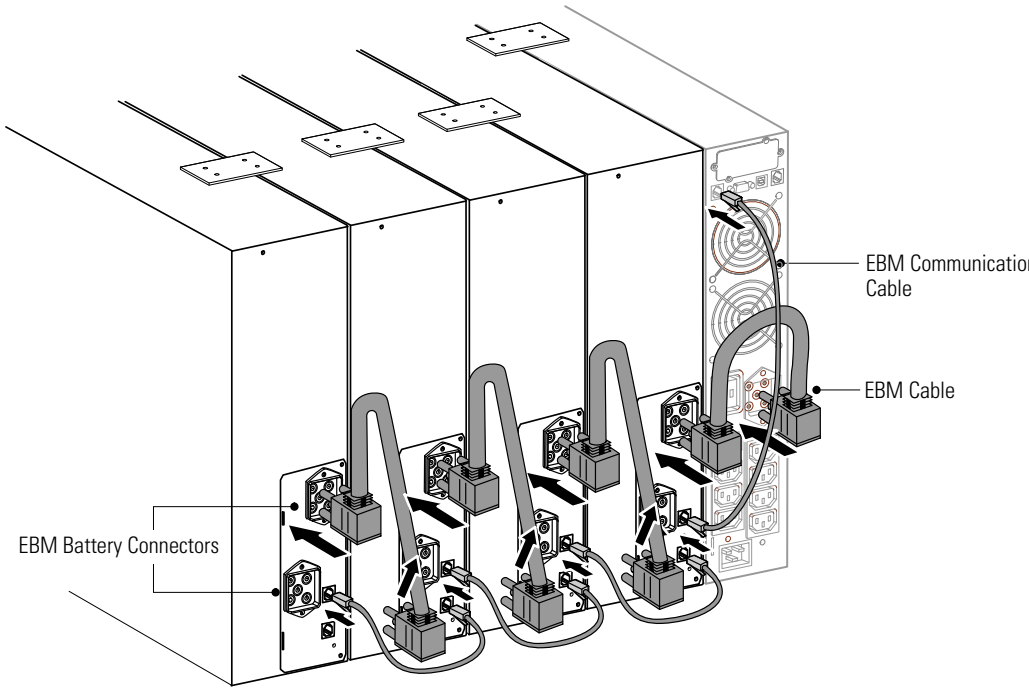

Figure 8. UPS Installation with Four EBMs

3. If you plan to install power management software, connect your computer to the USB port or RS-232 communication port using the supplied communication cable.

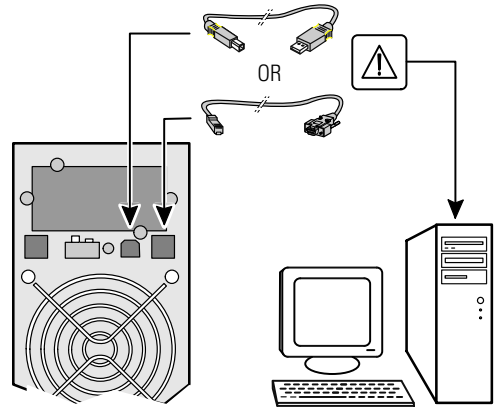

Figure 9. Installing a Communication Cable

4. **For rackmount installations only.** If your rack has conductors for grounding or bonding of ungrounded metal parts, connect the ground cable (not included) to the ground bonding screw. See "UPS Rear Panels" on page 33.

5. Plug the equipment to be protected into the appropriate UPS output receptacles (see page 42 for more information on load segments). See Figure 10.

NOTE *DO NOT protect laser printers with the UPS because of the exceptionally high power requirements of the heating elements.*

6. **High-voltage models only.** Install the cord-retention bracket to secure the cords and provide strain relief (see Figure 10).

   Plug a 10A power cord into the input connector on the UPS rear panel (16A power cord supplied for 2500–3000 VA models).

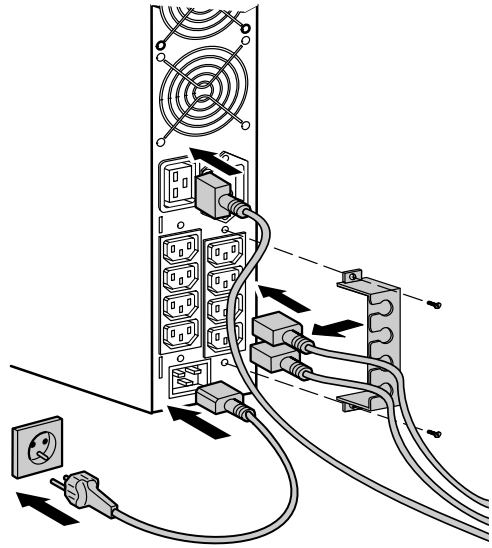

Figure 10. Installing the Power and Equipment Cords (High-voltage only)

7. If you are installing a remote power-off or a remote on/off switch, see the following section, "RPO and ROO Installation," to install the switch before powering on the UPS.

8. Continue to "Turning the UPS On" on page 35.

RPO and ROO Installation

The Eaton 5130 includes a two-position terminal (see Figure 11) that can be either left closed or configured one of two ways:

- **RPO:** Allows a remote contact to be used to disconnect all equipment connected to the UPS. Restarting the UPS requires manual intervention.
- **ROO:** Allows remote action of the ⏻ button to shut down the UPS.

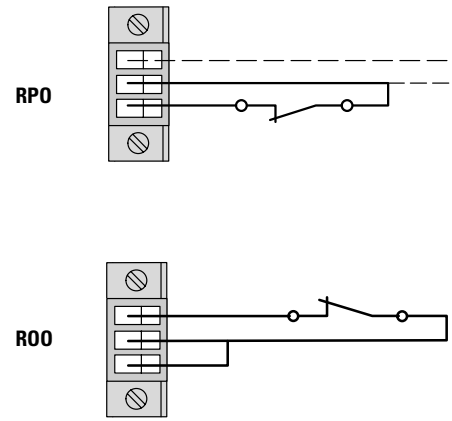

Figure 11. RPO/ROO Connection

WARNING

The RPO/ROO circuit is an IEC 60950 safety extra low voltage (SELV) circuit. This circuit must be separated from any hazardous voltage circuits by reinforced insulation.

To install the RPO or ROO switch:

1. Verify that the UPS is off and unplugged.
2. Unscrew and remove the RPO/ROO connector from the RPO/ROO port on the UPS rear panel.
3. Refer to the following table to plan the RPO or ROO behavior:

Contact	RPO	ROO*
Open	UPS shuts down, the ⚠ indicator illuminates	UPS shuts down
Closed	Normal operation To return to normal operation, deactivate the remote external contact and restart the UPS by pressing the ⏻ button	UPS starts up (UPS connected to AC power and AC power is available)

NOTE The local ⏻ button overrides the ROO function.

4. Connect isolated, normally-closed, dry contacts (rated to handle 60 Vdc maximum, 30 Vac RMS maximum, and 20 mA maximum). Use stranded, non-shielded wiring, size 0.75 mm^2–0.5 mm^2 (18–20 AWG).
5. Reinstall the RPO/ROO connector to the RPO/ROO port.
6. Verify that the externally-connected RPO switch is not activated to enable power to the UPS output receptacles.
7. Plug the UPS power cord into a power outlet.
8. Press and hold the ⏻ button until you hear the UPS beep (approximately one second).
9. Activate the external RPO or ROO switch to test the function. Verify the status change on the UPS front panel.
10. **RPO only.** De-activate the external RPO switch and restart the UPS.

UPS Rear Panels

This section shows the rear panels of the Eaton 5130 models.

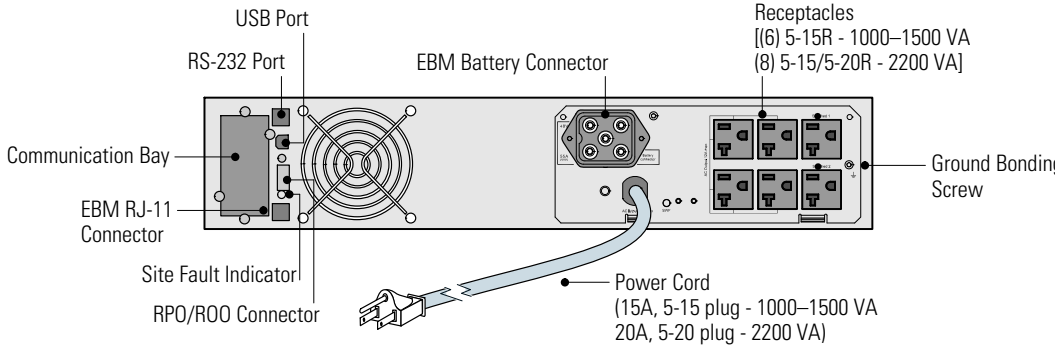

Figure 12. 1000–2200 VA, Low-Voltage Rear Panel (1000–1500 VA Rear Panel Shown)

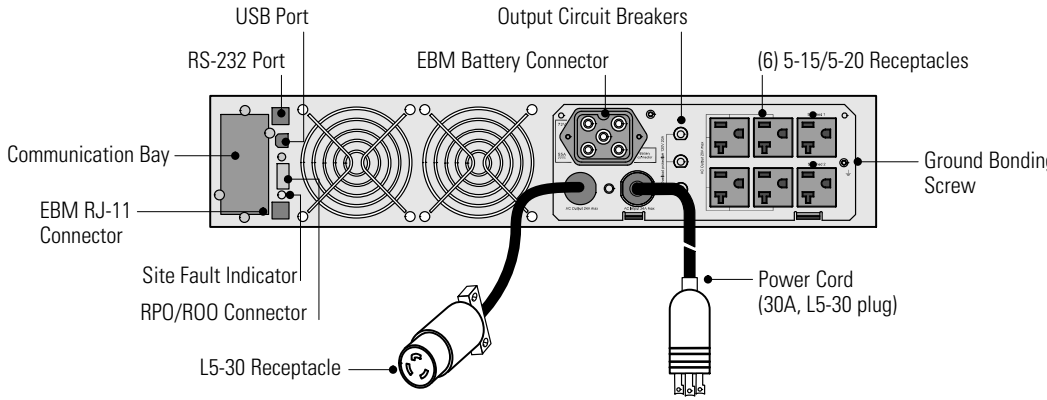

Figure 13. 3000 VA, Low-Voltage Rear Panel

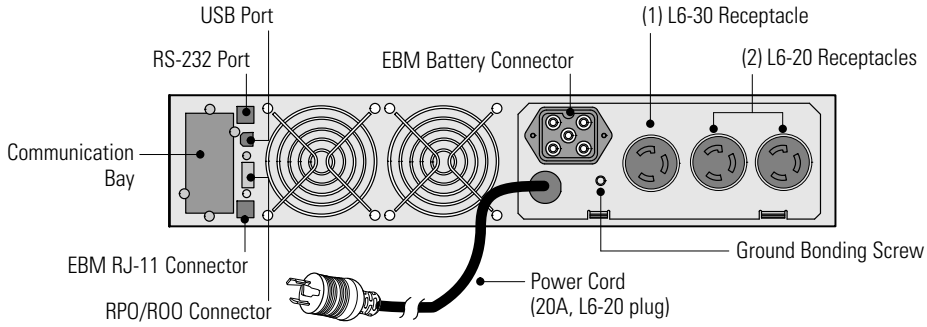

Figure 14. 208V Rear Panel

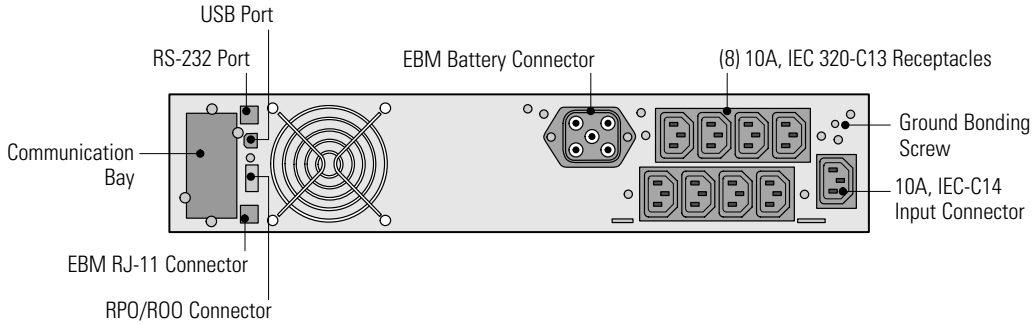

Figure 15. 1000–1750 VA, High-Voltage Rear Panel

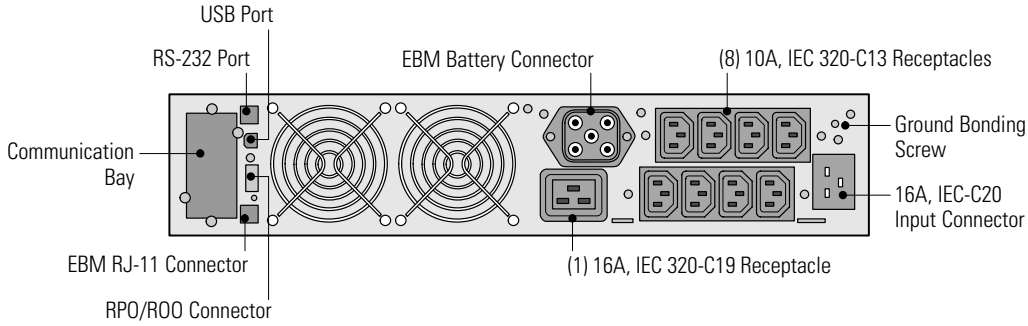

Figure 16. 2500–3000 VA, High-Voltage Rear Panel

Chapter 4 Operation

This section describes:

- Turning the UPS on and off
- Starting the UPS on battery
- Initiating the self-test
- Operating modes

Turning the UPS On

To turn the UPS on:

1. Plug the UPS power cord into a power outlet.

The bar graph indicators illuminate, indicating the UPS is in Standby mode.

2. Press and hold the button until you hear the UPS beep (approximately two seconds).

The alarm beeps once and all front panel indicators flash briefly. The button and the illuminate. Conditions permitting, the UPS runs a battery test and the bar graph indicators cycle through. The load segment indicators (1 and 2) show that power is available to the output receptacles.

The bar graph indicators display the percentage of load being applied to the UPS. The UPS is now in Normal mode and supplying power to your equipment.

To change the factory-set defaults, see "Customizing the UPS with the UPS Configuration Tool " on page 43.

3. If the indicator illuminates, see Table 17 on page 62.

NOTE *The batteries charge to 90% capacity in approximately 3 hours. However, it is recommended that the batteries charge for 24 hours after installation or long-term storage.*

NOTE *If more than two EBMs are installed, an external battery charger is recommended for faster recharge times.*

Starting the UPS on Battery

NOTE *Before using this feature, the UPS must have been powered by utility power at least once.*

To turn on the UPS without using utility power, press and hold the ⏻ button for two seconds. The UPS starts up in Battery mode and supplies battery power to your equipment.

Turning the UPS Off

NOTE *Pressing the ⏻ button while the UPS is in Battery mode causes the UPS to shut down immediately.*

To turn off the UPS:

1. Prepare your equipment for shutdown.
2. Press and hold the ⏻ button for two seconds. The UPS transfers to Standby mode (if utility power is available) and removes power from your equipment.
3. Unplug the UPS.

   If you do not unplug the UPS, it remains in Standby mode.

Operating Modes

The Eaton 5130 front panel indicates the UPS status through the UPS indicators. Figure 17 shows the UPS front panel indicators and controls.

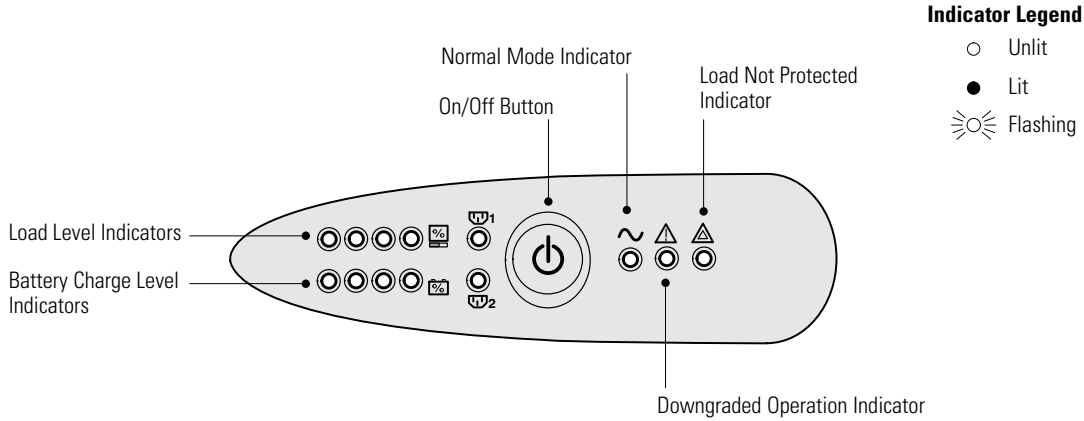

Figure 17. UPS Front Panel

Normal Mode

During Normal mode, the ⏻ button and the ∼ indicator illuminate and the front panel displays the percentage of UPS load capacity being used by the protected equipment (see Figure 18). The UPS monitors and charges the batteries as needed and provides power protection to your equipment.

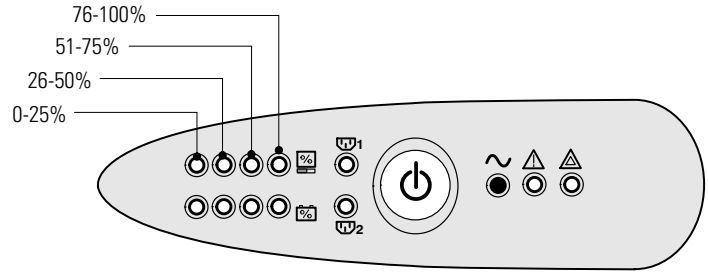

Figure 18. Load Level Indicators

When all of the bar graph indicators and the ⚠ indicator are illuminated, power requirements exceed UPS capacity; see page 62 for more information.

Battery Mode

When the UPS is operating during a power outage, the alarm beeps once every 10 seconds and the ⏻ button, the ~, and ⚠ indicators are on. The [%] bar graph indicators show the level of remaining battery power.

When utility power returns, the UPS transfers to Normal mode operation while the battery recharges.

If battery capacity becomes low while in Battery mode, the alarm beeps every three seconds. Immediately complete and save your work to prevent data loss and similar difficulties.

When utility power is restored after the UPS shuts down, the UPS automatically restarts.

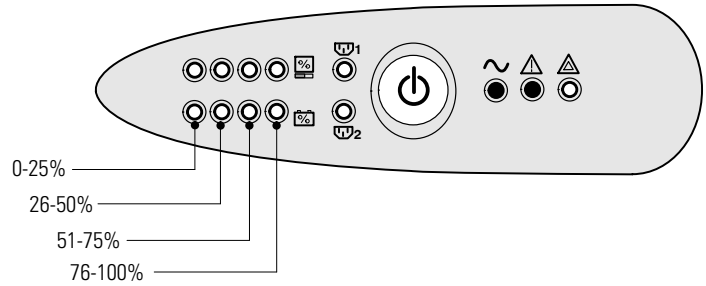

Figure 19. Battery Charge Level Indicators

Standby Mode

When the UPS is turned off and remains plugged into a power outlet, the UPS is in Standby mode. The [%] bar graph indicators are on and all other indicators are off, indicating that power is not available from the UPS output receptacles. The battery recharges when necessary.

NOTE *For 230V models, the output receptacles may remain electrically live (up to 115V). Unplug the UPS to ensure power is not available to the output receptacles.*

Chapter 5 Additional UPS Features

This section describes:

- USB port
- RS-232 communication port
- Communication card
- Load segments (PowerShare)

The Eaton 5130 UPS includes a USB port, a RS-232 communication port, and a bay for an optional communication card. The USB and RS-232 ports cannot operate simultaneously.

USB Port

The UPS can communicate with a USB-compliant computer using LanSafe® Power Management Software or other HID-compliant power management software compatible with Microsoft® Windows® 2000 and XP operating systems that support HID devices.

NOTE *The latest versions of the LanSafe Power Management Software and the USB firmware are available at www.eaton.com/powerquality.*

To establish communication between the UPS and a computer:

1. The USB port is hot-pluggable. Connect the USB cable to the USB port on the UPS rear panel (see Figure 20).

Connect the other end of the USB cable to the USB port on your computer.

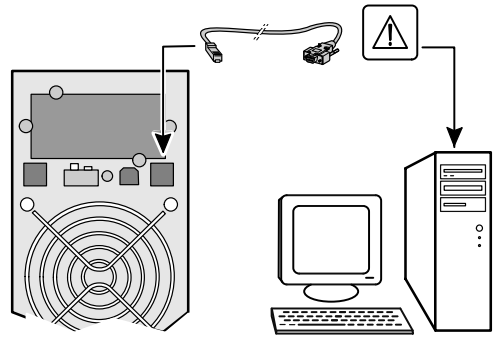

Figure 20. The USB Port

2. Install the LanSafe Power Management Software and USB drivers according to the instructions provided at www.eaton.com/powerquality.

Contact Communication Port (optional)

When a signal is activated, the contact is closed between the common (Pin 4) and the pin for the corresponding signal.

Contact characteristics (optocoupler):

- **Voltage:** 48 V DC max
- **Current:** 25 mA max
- **Power:** 1.2W

Figure 21 identifies the cable pins and Table 4 describes the pin functions.

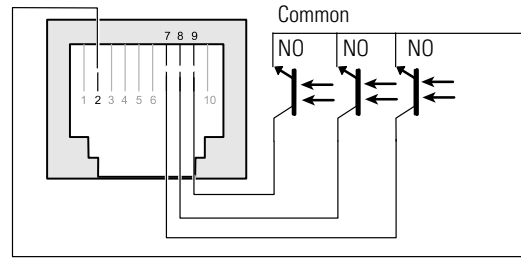

NOTE Normally-open (NO)

Figure 21. Communication Port

Table 4. Communication Port Pin Assignment

Pin Number	Function
1, 3, 4, 5, 6, 10	Not used
2	Common
7	Low Battery
8	Operation on battery power
9	UPS ON, equipment supplied

Load Segments (PowerShare)

Each UPS has programmable outlets as shown in Figure 22 through Figure 24. During a power outage, you can keep key pieces of equipment running while you turn off other equipment. It is preferable to connect the non-priority loads to the programmable receptacles, ⏦1 and ⏦2. This feature allows you to save battery power. See your power management software manual for details (refer to www.eaton.com/powerquality for the latest information).

NOTE *If power management software is not used, the individual load segments cannot be controlled.*

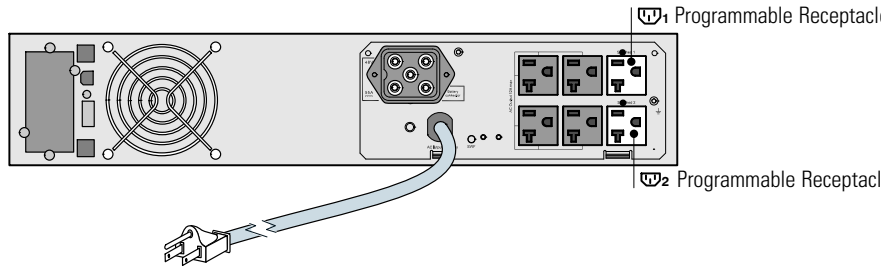

Figure 22. Low-Voltage Load Segments

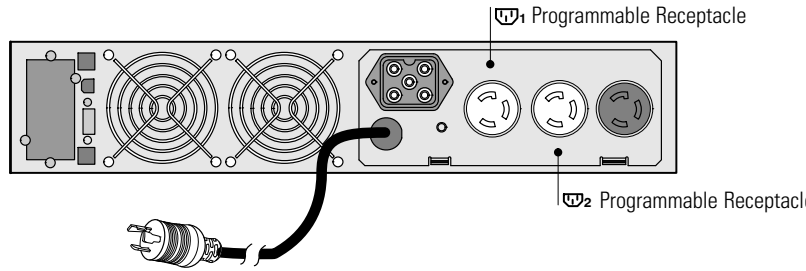

Figure 23. 208V Load Segments

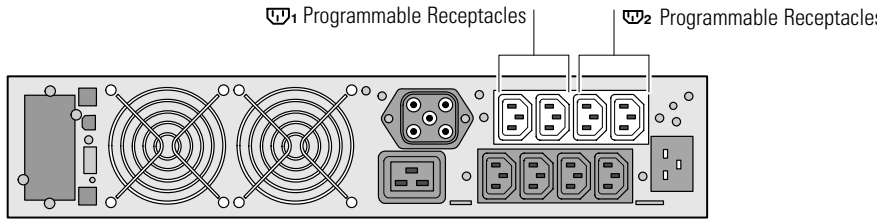

Figure 24. High-Voltage Load Segments

Customizing the UPS with the UPS Configuration Tool

To customize the UPS settings:

1. Download the UPS Configuration tool from www.eaton.com/powerquality.
2. Follow the on-screen instructions for the Eaton 5130.

   It is possible to modify the settings listed below (detailed comments are available in the UPS Configuration tool).

Table 5. Main Output Options

Function	Factory Setting	Other Available Settings
Low-Voltage Models. Output voltage on battery power	120 Vac	100/120/127 Vac
High-Voltage Models. Output voltage on battery power	230 Vac	200/208/220/240 Vac
PW5130G3000-XL2U Models. Output voltage on battery power	208V	—
All Models. Overload alarm threshold	105%	30/50/70%

Table 6. Voltage Threshold Options

Low-Voltage Model Function	Factory Setting	Other Available Settings
High threshold for transfer to battery	151 Vac ±3%	141–153 Vac
Low threshold for transfer to battery	89 Vac ±3%	89–94 Vac
Fader activation threshold	132 Vac ±3%	127–138 Vac
Booster activation threshold	102 Vac ±3%	92–108 Vac
Maximum input-voltage range	Disabled	Enabled[1]
High-Voltage Model Function	**Factory Setting**	**Other Available Settings**
High threshold for transfer to battery	294 Vac	271–294 Vac
Low threshold for transfer to battery	160 Vac	160–180 Vac
Fader activation threshold	265 Vac	244–265 Vac
Booster activation threshold	184 Vac	184–207 Vac
Maximum input-voltage range	Disabled	Enabled[2]

[1] Low threshold for transfer to battery is 70V.
[2] Low threshold for transfer to battery is 150V.

PW5130G3000-XL2U Function	Factory Setting	Other Available Settings
High threshold for transfer to battery	263 Vac	—
Low threshold for transfer to battery	160 Vac	—
Fader activation threshold	229 Vac	—
Booster activation threshold	177 Vac	—
Maximum input-voltage range	Disabled	Enabled[2]

[2] Low threshold for transfer to battery is 150V.

Table 7. UPS Sensitivity Options

Function	Factory Setting	Other Available Settings
UPS-sensitivity level	Normal	High or low

Table 8. UPS On/Off Options

Function	Factory Setting	Other Available Settings
Automatic start	Enabled	Disabled
Cold start	Enabled	Disabled
Forced shutdown	Enabled	Disabled
Energy-savings mode	Disabled	Enabled
UPS ON/OFF controlled by software	Enabled	Disabled
Battery level before restart	0%	0–100%

Table 9. Battery Options

Function	Factory Setting	Other Available Settings
Battery-test intervals	Weekly	No test / daily test / monthly test
Low-battery warning	20%	0–100%
Battery protection against deep discharge	Enabled	Disabled
Audio alarm	Enabled	Disabled
Additional battery module	Automatic detection of number of battery modules	For specific batteries, 25–81 Ah

Chapter 6 UPS Maintenance

This section explains how to:

- Care for the UPS and batteries
- Transport the UPS
- Store the UPS and batteries
- Replace the batteries
- Test new batteries
- Recycle used batteries or UPS

UPS and Battery Care

For the best preventive maintenance, keep the area around the UPS clean and dust-free. If the atmosphere is very dusty, clean the outside of the system with a vacuum cleaner.

For full battery life, keep the UPS at an ambient temperature of 25°C (77°F).

NOTE *The batteries in the UPS are rated for a 3–5 year service life. The length of service life varies, depending on the frequency of usage and ambient temperature. Batteries used beyond expected service life will often have severely reduced runtimes. Replace batteries at least every 5 years to keep units running at peak efficiency.*

Transporting the UPS

NOTE *The internal UPS batteries MUST be disconnected.*

If the UPS requires any type of transportation:

1. Verify that the UPS is unplugged and turned off.
2. Disconnect the UPS internal battery connector using the steps in "Connecting the UPS Internal Battery" on page 22 in reverse order.

Storing the UPS and Batteries

If you store the UPS for a long period, recharge the battery every 6 months by plugging the UPS into a power outlet. The batteries charge to 90% capacity in approximately 3 hours. However, it is recommended that the batteries charge for 24 hours after long-term storage.

Check the battery recharge date on the shipping carton label. If the date has expired and the batteries were never recharged, do not use the UPS. Contact your service representative.

When to Replace Batteries

If all four bar graph indicators flash and either the or indicators are on, the batteries may need replacing. Contact your service representative to order new batteries.

Replacing Batteries

NOTE *DO NOT DISCONNECT the batteries while the UPS is in Battery mode.*

With the hot-swappable battery feature, UPS batteries can be replaced easily without turning the UPS off or disconnecting the load.

If you prefer to remove input power to change the batteries, see "Turning the UPS Off" on page 36.

Consider all warnings, cautions, and notes before replacing batteries.

WARNING

- Batteries can present a risk of electrical shock or burn from high short-circuit current. The following precautions should be observed: 1) Remove watches, rings, or other metal objects; 2) Use tools with insulated handles; 3) Do not lay tools or metal parts on top of batteries.
- ELECTRIC ENERGY HAZARD. Do not attempt to alter any battery wiring or connectors. Attempting to alter wiring can cause injury.

How to Replace Internal Batteries

CAUTION

- Pull the battery out onto a flat, stable surface. The battery is unsupported when you pull it out of the UPS.
- To ensure safety and high performance, use only batteries supplied by Eaton.

To replace the UPS internal batteries:

1. Remove the UPS front cover. Press the button on the left side of the cover and then pull the left side (see Figure 25).

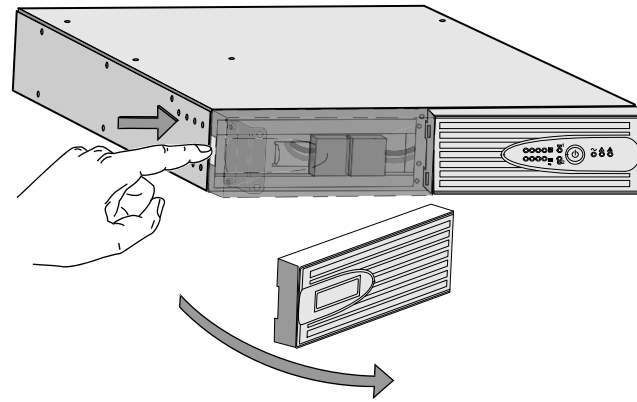

Figure 25. Removing the UPS Front Cover

2. Disconnect the internal battery connectors (see Figure 26).

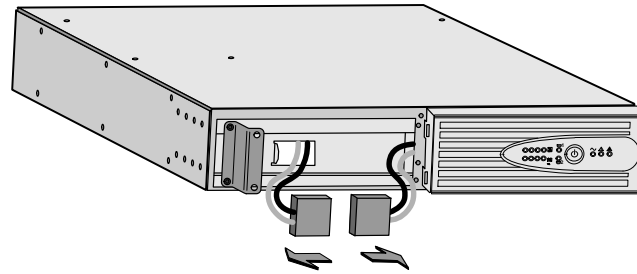

Figure 26. Disconnecting the Internal Battery Connectors

3. Unscrew and remove the metal battery cover (see Figure 27).

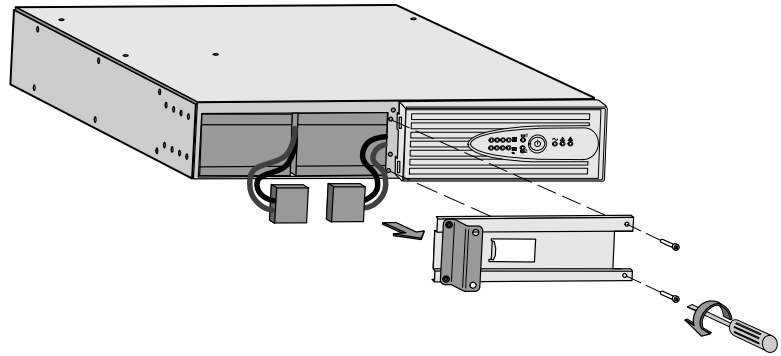

Figure 27. Removing the Battery Cover

4. Pull the battery block out onto a flat, stable surface (see Figure 28).

   See "Recycling the Used Battery or UPS" on page 52 for proper disposal.

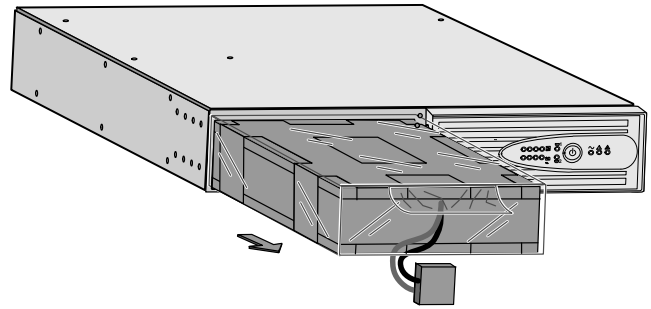

Figure 28. Removing the Battery Block

5. Install the new batteries in the reverse order of removal.
6. Replace the metal battery cover.
7. Replace the UPS front cover.

How to Replace Extended Battery Modules

To replace the Extended Battery Modules (EBMs):

1. Unplug the EBM cable from the UPS.

   If additional EBMs are installed, unplug the EBM cable from the battery connector on each EBM.

2. Unplug the EBM communication cable from the RJ-11 port. Repeat for each EBM.

3. **For tower models only.** Remove the joining bracket between cabinets.

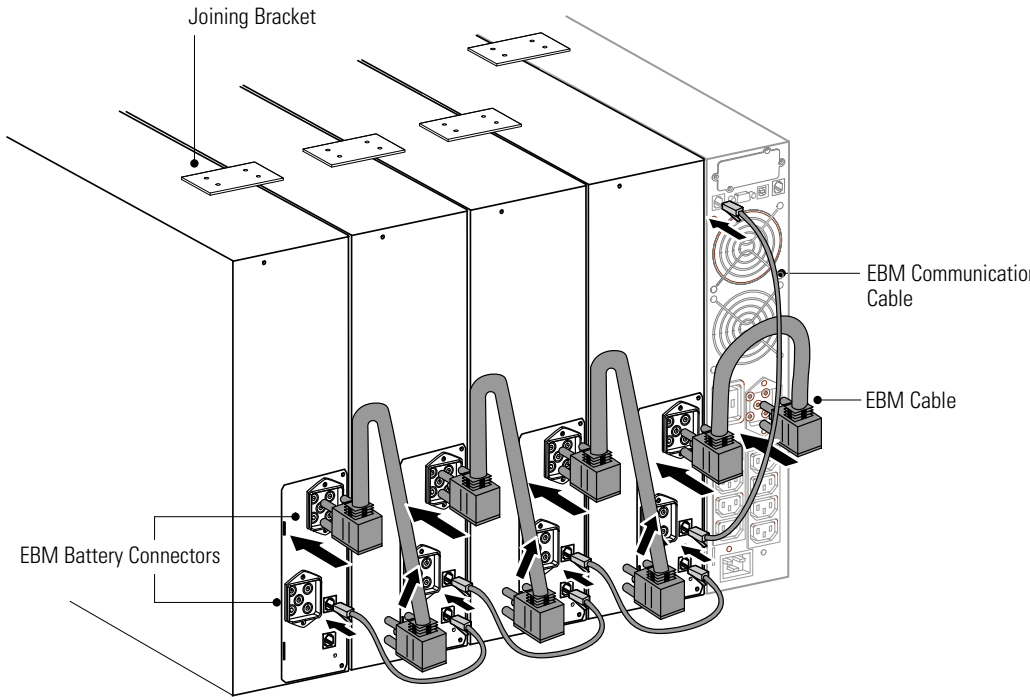

Figure 29. EBM Connections (230V Tower Model Shown)

4. Replace the EBM. See “Recycling the Used Battery or UPS” on page 52 for proper disposal.
5. **For tower models only.** Install the joining bracket between cabinets.
6. Plug the new EBM into the UPS as shown in Figure 29.

   For additional EBMs, plug the EBM cable into the battery connector on the adjacent EBM.
7. Plug the EBM communication cable into the RJ-11 port. Repeat for each EBM.

Recycling the Used Battery or UPS

Contact your local recycling or hazardous waste center for information on proper disposal of the used battery or UPS.

WARNING

- Do not dispose of the battery or batteries in a fire. Batteries may explode. Proper disposal of batteries is required. Refer to your local codes for disposal requirements.
- Do not open or mutilate the battery or batteries. Released electrolyte is harmful to the skin and eyes. It may be toxic.

CAUTION

Do not discard the UPS or the UPS batteries in the trash. This product contains sealed, lead-acid batteries and must be disposed of properly. For more information, contact your local recycling/reuse or hazardous waste center.

CAUTION

Do not discard waste electrical or electronic equipment (WEEE) in the trash. For proper disposal, contact your local recycling/reuse or hazardous waste center.

Chapter 7 Specifications

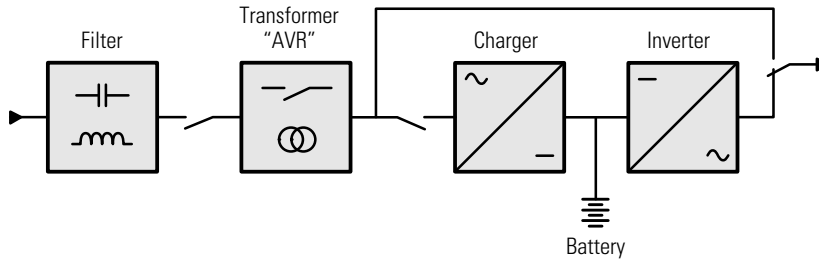

Figure 30. Block Diagram

Table 10. Low-Voltage Model Specifications

Model Number	Power Levels (Rated at Nominal Inputs)	AC Input			Output on Battery Power	
		Nominal Voltage	Voltage Range[1]	Frequency Range[2]	Voltage[3]	Frequency
PW5130L1000-XL2U	1000 VA, 1000W	120V	89–151V	47–70 Hz (50 Hz system), 56.5–70 Hz (60 Hz system)	120V (+6/-10%)	50/60 Hz ±0.1%
PW5130L1500-XL2U	1500 VA, 1400W					
PW5130L2200-XL2U	2200 VA, 1920W					
PW5130L3000-XL2U	2880 VA, 2700W					
PW5130L3000-XL3U						

[1] The high and low thresholds can be adjusted using the UPS Configuration tool (see page 43).
[2] Up to 40 Hz in low-sensitivity mode (programmable using the UPS Configuration tool).
[3] Adjustable to 100V (10% derating of output power) 120/127V.

Table 11. High-Voltage Model Specifications

Model Number	Power Levels (Rated at Nominal Inputs)	AC Input			Output on Battery Power	
		Nominal Voltage	Voltage Range[1]	Frequency Range[2]	Voltage[3]	Frequency
PW5130i1250-XL2U	1250 VA, 1150W	220–240V	160–294V	47–70 Hz (50 Hz system), 56.5–70 Hz (60 Hz system)	230V (+6/-10%)	50/60 Hz ±0.1%
PW5130i1750-XL2U	1750 VA, 1600W					
PW5130i2500-XL2U	2500 VA, 2250W					
PW5130i3000-XL2U	3000 VA, 2700W					
PW5130i3000-XL3U						
PW5130G3000-XL2U	3000 VA, 2700W	208V	160–263V		208V (+6/-10%)	

[1] The high and low thresholds can be adjusted using the UPS Configuration tool (see page 43).
[2] Up to 40 Hz in low-sensitivity mode (programmable using the UPS Configuration tool).
[3] Adjustable to 100V (10% derating of output power) 120/127V.

Table 12. Weights and Dimensions

Low-Voltage Model Number	Dimensions (WxHxD)	Weight
PW5130L1000-XL2U	440 × 86 × 509 mm 17.3″ × 3.4″ × 20.0″	24.6 kg (54.3 lb)
PW5130L1500-XL2U		26.3 kg (58.0 lb)
PW5130L2200-XL2U	440 × 86 × 634 mm 17.3″ × 3.4″ × 25.0″	34.7 kg (76.4 lb)
PW5130L3000-XL2U		35.3 kg (77.9 lb)
PW5130L3000-XL3U	440 × 131 × 484 mm 17.3″ × 5.2″ × 19.0″	33.8 kg (75.5 lb)
High-Voltage Model Number	**Dimensions (WxHxD)**	**Weight**
PW5130i1250-XL2U	440 × 86 × 509 mm 17.3″ × 3.4″ × 20.0″	24.3 kg (53.6 lb)
PW5130i1750-XL2U		
PW5130i2500-XL2U	440 × 86 × 634 mm 17.3″ × 3.4″ × 25.0″	33.8 kg (74.5 lb)
PW5130i3000-XL2U		
PW5130G3000-XL2U	440 × 86 × 634 mm 17.3″ × 3.4″ × 25.0″	35.3 kg (77.9 lb)
PW5130i3000-XL3U	440 × 131 × 484 mm 17.3″ × 5.2″ × 19.0″	34.3 kg (75.6 lb)

Table 12. Weights and Dimensions (continued)

EBM Model Number	Dimensions (WxHxD)	Weight
PW5130N1750-EBM2U	440 × 86 × 509 mm 17.3″ × 3.4″ × 20.0″	29.1 kg (64.2 lb)
PW5130N3000-EBM2U	440 × 86 × 634 mm 17.3″ × 3.4″ × 25.0″	42.0 kg (92.7 lb)
PW5130N3000-EBM3U	440 × 131 × 484 mm 17.3″ × 5.2″ × 19.0″	39.9 kg (88.0 lb)

Table 13. Power Connections

Model	Input Connection	Output Receptacles
PW5130L1000-XL2U	8 ft, 15A, 5-15P power cord	(6) 5-15R
PW5130L1500-XL2U		
PW5130L2200-XL2U	8 ft, 20A, L5-20P power cord	(8) 5-15/5-20R
PW5130L3000-XL2U	6 ft, 30A, L5-30P power cord	(6) 5-15/5-20R; (1) L5-30R
PW5130L3000-XL3U		
PW5130i1250-XL2U	10A, IEC-C14 input connector	(8) 10A, IEC 320-C13
PW5130i1750-XL2U		
PW5130i2500-XL2U	16A, IEC-C20 input connector	(8) 10A, IEC 320-C13; (1) 16A, IEC 320-C19
PW5130i3000-XL2U		
PW5130i3000-XL3U		
PW5130G3000-XL2U	6 ft, 20A, L6-20P power cord	(1) L6-30R; (2) L6-20R

Table 14. Environmental and Safety

	Low Voltage Models	High Voltage Models
Operating Temperature	0°C to 40°C (32°F to 104°F)	
Storage Temperature	-25°C to 40°C (-13°F to 104°F)	
Relative Humidity	Storage: 10–95% noncondensing Operating: 20–95% noncondensing	
Audible Noise	Less than 40 dBA Normal mode, typical load Less than 45 dBA (50 dBA for 3000 VA) Battery mode	
Surge Suppression	ANSI C62.41 Category B, IEC 61000-4-5	
Safety Conformance	UL 1778, UL 497A; CSA C22.2, No. 107.1; NOM-019-SCFI	UL 1778, UL 497A (data line only); CSA C22.2, No. 107.1; EN 62040-1-1, IEC 60950-1, IEC 50091-1-1
Agency Markings	cULus, cUL	cTUVus, CE
EMC	FCC Part 15 Class A	EN 62040-2 C1, AS 62040-2 C1, FCC Part 15 Class B

Table 15. Battery

UPS Configuration	1000/1250 VA: (4) 12V, 7.2 Ah internal batteries 1500/1750 VA: (4) 12V, 9 Ah internal batteries 2200/2500 VA: (6) 12V, 7.2 Ah internal batteries 3000 VA: (6) 12V, 9 Ah internal batteries
EBM Configuration	PW5130N1750-EBM2U: 48 Vdc, (2 stings of 4) 12V, 9 Ah batteries PW5130N3000-EBM2U and PW5130N3000-EBM3U: 72 Vdc, (2 strings of 6) 12V, 9 Ah batteries
Type	Sealed, maintenance-free, valve-regulated, lead-acid

Table 16. Battery Runtimes (in minutes)

Load	UPS Internal Batteries	+1 EBM	+2 EBMs	+3 EBMs	+4 EBMs
PW5130L1000-XL2U (with PW5130N1750-EBM2U)					
100 VA/70W	112	440	841	1196	1530
250 VA/175W	59	255	570	725	975
500 VA/350W	25	125	225	305	422
750 VA/525W	16	78	140	210	155
1000 VA/700W	10	56	100	150	192
1000 VA/1000W	7	36	66	97	128
PW5130L1500-XL2U (with PW5130N1750-EBM2U)					
150 VA/105W	90	302	495	710	920
375 VA/262W	45	150	270	410	530
750 VA/525W	19	61	121	185	250
1125 VA/787W	10	45	70	110	150
1500 VA/1050W	7	32	58	84	111
1500 VA/1400W	4	22	40	55	77
PW5130L2200-XL2U (with PW5130N3000-EBM2U)					
195 VA/136W	119	426	608	1082	1450
488 VA/341W	55	185	370	639	810
975 VA/682W	23	105	190	285	370
1463 VA/1045W	12	56	105	150	220
1950 VA/1365W	8	38	65	114	152
1950 VA/1920W	5	27	48	70	97

NOTE Battery times are approximate and vary depending on the load configuration and battery charge.

Table 16. Battery Runtimes (in minutes)

Load	UPS Internal Batteries	+1 EBM	+2 EBMs	+3 EBMs	+4 EBMs
PW5130L3000-XL2U / PW5130L3000-XL3U / PW5130G3000-XL2U (with PW5130N3000-EBM2U or PW5130N3000-EBM3U depending on UPS height)					
300 VA/210W	80	270	500	705	901
750 VA/525W	39	143	308	370	482
1500 VA/1050W	16	62	117	160	210
2250 VA/1575W	8	35	59	85	105
3000 VA/2100W	5	24	40	59	82
3000 VA/2700W	3	17	32	47	62
PW5130i1250-XL2U (with PW5130N1750-EBM2U)					
125 VA/115W	119	430	741	1052	1363
313 VA/288W	32	150	267	384	502
625 VA/575W	15	58	100	143	185
938 VA/863W	6	42	77	113	148
1250 VA/1150W	5	29	54	79	104
PW5130i1750-XL2U (with PW5130N1750-EBM2U)					
175 VA/160W	80	245	410	575	740
438 VA/400W	24	96	168	240	312
875 VA/800W	9	36	62	89	115
1313 VA/1200W	6	24	42	60	79
1750 VA/1600W	3	16	28	41	53

NOTE Battery times are approximate and vary depending on the load configuration and battery charge.

Table 16. Battery Runtimes (in minutes)

Load	UPS Internal Batteries	+1 EBM	+2 EBMs	+3 EBMs	+4 EBMs
PW5130i2500-XL2U (with PW5130N3000-EBM2U)					
250 VA/225W	77	300	410	780	1064
625 VA/563W	28	122	207	309	412
1250 VA/1125W	11	55	100	150	206
2153 VA/1938W	6	31	59	90	120
2500 VA/2250W	3	23	42	63	85
PW5130i3000-XL2U / PW5130i3000-XL3U (with PW5130N3000-EBM2U or PW5130N3000-EBM3U depending on UPS height)					
300 VA/210W	80	270	500	705	901
750 VA/525W	39	143	308	370	482
1500 VA/1050W	16	62	117	160	210
2250 VA/1575W	8	35	59	85	105
3000 VA/2100W	5	24	40	59	89
3000 VA/2700W	3	17	32	47	62

NOTE Battery times are approximate and vary depending on the load configuration and battery charge.

Chapter 8 Troubleshooting

This section explains:

- UPS alarms and conditions
- Service and support

Audible Alarms and UPS Conditions

The UPS has an audible alarm feature to alert you of potential power problems. Use Table 17 to determine and resolve the UPS alarms and conditions.

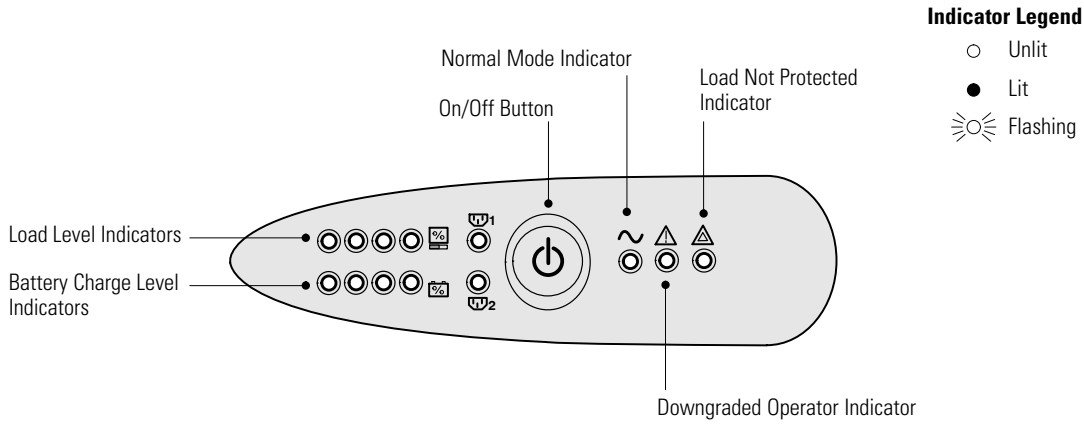

Figure 31. Alarm Indicators

Table 17. Troubleshooting Guide

Alarm or Condition	Possible Cause	Action
When starting the UPS with the button, all the indicators turn on once, the alarm beeps once, and then indicator remains on.	The remote power-off (RPO) contact has been activated to shut down the UPS and now prevents restart.	Set the contact back to its normal position and press the button to restart.
The button, and indicators are on and all the bar graph indicators flash.	The percent load is greater than the set overload level or UPS capacity.	Check the power drawn by the connected devices and disconnect any non-priority devices. Check the overload setting.
The button and indicator are on and all the bar graph indicators flash.	A critical overload has occurred. If utility power fails, the load will not be protected in Battery mode.	Check the power drawn by the connected devices and disconnect any non-priority devices.
The indicator is on and all the bar graph indicators flash.	A battery fault has been detected during the automatic test.	Replace the battery (see “Replacing Batteries” on page 48).
The indicator alone is on and the alarm sounds continuously.	UPS fault condition. The load is not supplied.	Contact your service representative.

Service and Support

If you have any questions or problems with the UPS, call your **Local Distributor** or the **Help Desk** at one of the following telephone numbers and ask for a UPS technical representative.

United States:	1-800-356-5737
Canada:	1-800-461-9166 ext 260
All other countries:	Call your local service representative

Please have the following information ready when you call the Help Desk:

- Model number
- Serial number
- Version number (if available)
- Date of failure or problem
- Symptoms of failure or problem
- Customer return address and contact information

If repair is required, you will be given a Returned Material Authorization (RMA) Number. This number must appear on the outside of the package and on the Bill Of Lading (if applicable). Use the original packaging or request packaging from the Help Desk or distributor. Units damaged in shipment as a result of improper packaging are not covered under warranty. A replacement or repair unit will be shipped, freight prepaid for all warrantied units.

NOTE *For critical applications, immediate replacement may be available. Call the* ***Help Desk*** *for the dealer or distributor nearest you.*

Chapter 9 Warranty

Two-Year Limited Warranty with Extension to Three-Year Limited Warranty (US and Canada)

Eaton UPS Models: 3105, 5110, 5115, 5125, and 5130

WARRANTOR: The warrantor for the limited warranties set forth herein is Eaton Corporation, an Ohio Corporation company ("Company").

LIMITED WARRANTY: This limited warranty (this "Warranty") applies only to the original End-User (the "End-User") of any Eaton 3105, 5110, 5115, 5125, and 5130 Products (individually and collectively, the "Product") purchased on or after August 19, 2009 and cannot be transferred. This Warranty applies even in the event that the Product is initially sold by Company for resale to an End-User.

LIMITED WARRANTY PERIOD: The period covered by this Warranty for Product installed [and currently located] in the fifty (50) United States, the District of Columbia, and Canada is twenty-four (24) months from the date of purchase, or thirty (30) months from the date of shipment. For units which are registered online at www.eaton.com/PQ/Register, the warranty is extended to thirty-six (36) months from the date of purchase, or forty-two (42) months from the date of shipment.

WHAT THIS LIMITED WARRANTY COVERS: The warrantor warrants that the Product and battery (individually and collectively, the "Warranted Items") are free from defects in material and workmanship. If, in the opinion of Company, a Warranted Item is defective and the defect is within the terms of this Warranty, Company's sole obligation will be to repair or replace such defective Warranted Item (including by providing service, parts and labor, as applicable), at the option of Company.

PROCEDURES FOR REPAIR OR REPLACEMENT OF WARRANTED ITEMS: The Warranted Item will be repaired or replaced at a Company site or such other location as determined by Company.

If the Warranted Item is to be replaced by Company, and the End-User supplies a credit card number or purchase order for the value of the replacement Product, Company will use commercially reasonable business efforts to ship (via standard ground shipment and at no cost to the End-User) the replacement Warranted Item to the End-User within one (1) business day after Company receives notice of the warranty claim. In such case, the End-User must return (at Company's expense) the defective Warranted Item to Company in the same packaging as the replacement Warranted Item received by the End-User or as otherwise instructed by Company. If Company does not receive the defective Warranted Item, Company will either charge the End-User's credit card, or send the End-User an invoice (which the End-User agrees to pay), for the value of the replacement Product.

If the Warranted Item is to be replaced by Company, but the End-User is unwilling or unable to supply a credit card number or purchase order for the value of the replacement Product, Company will use commercially reasonable business efforts to ship (via standard ground shipment and at no cost to the End-User) the replacement Warranted Item to the End-User within one (1) business day after Company receives the defective Product from the End-User.

In any case, Company will provide shipping instructions and will pay its designated carrier for all shipping charges for return of defective equipment and replacement of Warranted Items. Any returned Warranted Item or parts that are replaced may be new or reconditioned. All Warranted Items returned to Company and all parts replaced by Company shall become the property of Company.

WHAT THIS LIMITED WARRANTY DOES NOT COVER: This Warranty does not cover any defects or damages caused by: (a) failure to properly store the Product before installation, including the charge of batteries no later than the date indicated on the packaging; (b) shipping and delivery of the Product if shipping is FOB Factory; (c) neglect, accident, abuse, misuse, misapplication, or incorrect installation; (d) repair or alteration not authorized in writing by Company personnel or performed by an authorized Company Customer Service Engineer or Agent; (e) improper testing, operation, maintenance, adjustment, or modification of any kind not authorized in writing by Company personnel or performed by an authorized Company Customer Service Engineer or Agent; or (f) use of the Product under other than normal operating conditions or in a manner inconsistent with the Product's labels or instructions.

This Warranty is not valid if the Product's serial numbers have been removed or are illegible. Any Warranted Items repaired or replaced pursuant to this Warranty will be warranted for the remaining portion of the original Warranty subject to all the terms thereof.

Company shall not be responsible for any charges for testing, checking, removal, or installation of Warranted Items.

COMPANY DOES NOT WARRANT EQUIPMENT NOT MANUFACTURED BY COMPANY. IF PERMITTED BY THE APPLICABLE MANUFACTURER, COMPANY SHALL PASS THROUGH SUCH MANUFACTURER'S WARRANTIES TO END-USER.

COMPANY DOES NOT WARRANT SOFTWARE, INCLUDING SOFTWARE EMBEDDED IN PRODUCTS, THAT IS NOT CREATED BY COMPANY. WITHOUT LIMITING THE FOREGOING, COMPANY SPECIFICALLY DOES NOT WARRANT SOFTWARE (SUCH AS LINUX) THAT WAS CREATED USING AN “OPEN SOURCE” MODEL OR IS DISTRIBUTED PURSUANT TO AN OPEN SOURCE LICENSE.

THIS WARRANTY IS THE SOLE AND EXCLUSIVE WARRANTY OFFERED BY COMPANY WITH RESPECT TO THE PRODUCTS AND SERVICES AND, EXCEPT FOR SUCH FOREGOING WARRANTY COMPANY DISCLAIMS ALL OTHER WARRANTIES INCLUDING BUT NOT LIMITED TO ANY IMPLIED WARRANTIES OF MERCHANTABILITY, TITLE, NON-INFRINGEMENT, AND FITNESS FOR A PARTICULAR PURPOSE. CORRECTION OF NON-CONFORMITIES IN THE MANNER AND FOR THE PERIOD OF TIME PROVIDED ABOVE SHALL CONSTITUTE COMPANY'S SOLE LIABILITY AND END-USER'S EXCLUSIVE REMEDY FOR FAILURE OF COMPANY TO MEET ITS WARRANTY OBLIGATIONS, WHETHER CLAIMS OF THE END-USER ARE BASED IN CONTRACT, IN TORT (INCLUDING NEGLIGENCE OR STRICT LIABILITY), OR OTHERWISE.

LIMITATION OF LIABILITY: The remedies of the End-User set forth herein are exclusive and are the sole remedies for any failure of Company to comply with its obligations hereunder. In no event shall Company be liable in contract, in tort (including negligence or strict liability) or otherwise for damage to property or equipment other than the Products, including loss of profits or revenue, loss of use of Products, loss of data, cost of capital, claims of customers of the End-User, or any special, indirect, incidental, or consequential damages whatsoever. The total cumulative liability of Company hereunder whether the claims are based in contract (including indemnity), in tort (including negligence or strict liability), or otherwise, shall not exceed the price of the Product on which such liability is based.

Company shall not be responsible for failure to provide service or parts due to causes beyond Company's reasonable control.

END-USER'S OBLIGATIONS: In order to receive the benefits of this Warranty, the End-User must use the Product in a normal way; follow the Product's user's guide; and protect against further damage to the Product if there is a covered defect.

OTHER LIMITATIONS: Company's obligations under this Warranty are expressly conditioned upon receipt by Company of all payments due to it (including interest charges, if any). During such time as Company has not received payment of any amount due to it for the Product, in accordance with the contract terms under which the Product is sold, Company shall have no obligation under this Warranty. Also during such time, the period of this Warranty shall continue to run and the expiration of this Warranty shall not be extended upon payment of any overdue or unpaid amounts.

COSTS NOT RELATED TO WARRANTY: The End-User shall be invoiced for, and shall pay for, all services not expressly provided for by the terms of this Warranty, including without limitation, site calls involving an inspection that determines no corrective maintenance is required. Any costs for replacement equipment, installation, materials, freight charges, travel expenses, or labor of Company representatives outside the terms of this Warranty will be borne by the End-User.

OBTAINING WARRANTY SERVICE: In the USA, call the Customer Reliability Center 7x24 at 800-356-5737. Outside of the USA, call your local Eaton product sales or service representative. For comments or questions about this Warranty, write to the Customer Quality Representative, 3301 Spring Forest Road, Raleigh, North Carolina 27616 USA.

Load Protection Guarantee (US and Canada)

Eaton UPS Models 3105, 5110, 5115, 5125, and 5130

GUARANTOR: The Guarantor for the load protection guaranty set forth herein is Eaton Corporation, an Ohio Corporation company ("Company").

LIMITED GUARANTY: This load protection guaranty (this "Guaranty") applies only to the original End-User (the "End-User") of any Eaton 3105, 5110, 5115, 5125, and 5130 Products (individually and collectively, the "Product") and cannot be transferred. This Guaranty applies even in the event that the Product is initially sold by Company for resale to an End-User.

WHAT THIS GUARANTY COVERS: For the lifetime of the Product, Guarantor promises to repair or replace, at Guarantor's option, the equipment (valued up to the limits shown below*) that is damaged by an AC power line surge, spike, or other transient when properly connected to Guarantor's uninterruptible power system ("UPS"). Reimbursement for or restoration of data loss excluded. This Guaranty applies only if all of the following circumstances arise:

1. The UPS is plugged into properly grounded and wired outlets, using no extension cords, adapters, other ground wires, or other electrical connectors;
2. The installation of the UPS complies with all applicable electrical and safety codes described by the National Electrical Code® (NEC®);
3. The UPS was used under normal operating conditions and in accordance with all labels and instructions; and
4. The UPS was not damaged by accident (other than AC power line transient), misuse, or abuse.

*Cumulative Limits to be paid by Guarantor under this Load Protection Guaranty:

- $25,000 for Eaton UPS Model 3105
- $150,000 for Eaton UPS Models 5110, 5115, 5125, and 5130

WHAT THIS GUARANTY DOES NOT COVER: Any reimbursement or repair to End-User's equipment does not include reimbursement for or restoration of any data loss. This Guaranty does not cover any defects or damages caused by: (a) failure to properly store the Product before installation, including the charge of batteries no later than the date indicated on the packaging; (b) shipping and delivery of the Product if shipping is FOB Factory; (c) neglect, accident, abuse, misuse, misapplication, or incorrect installation of Product; (d) repair or alteration of Product not authorized in writing by Company personnel or performed by an authorized Company Customer Service Engineer or Agent; (e) improper testing, operation, maintenance, adjustment, or modification of any kind to the Product not authorized in writing by Company personnel or performed by an authorized Company Customer Service Engineer or Agent; or (f) use of the Product under other than normal operating conditions or in a manner inconsistent with the Product's labels or instructions.

This Guaranty is not valid: (a) unless the End-User returns to Company the Warranty Registration Card or completes the registration form on www.eaton.com/PQ/Register within thirty (30) days of purchase; or (b) if the Product's serial numbers have been removed or are illegible.

Company shall not be responsible for any charges for testing, checking, removal, or installation of any items.

LIMITATION OF LIABILITY: THE REMEDIES OF THE END-USER SET FORTH HEREIN ARE EXCLUSIVE AND ARE THE SOLE REMEDIES FOR ANY FAILURE OF COMPANY TO COMPLY WITH ITS OBLIGATIONS HEREUNDER. EXCEPT AS OTHERWISE PROVIDED FOR IN THIS GUARANTY, IN NO EVENT SHALL COMPANY BE LIABLE IN CONTRACT, IN TORT (INCLUDING NEGLIGENCE OR STRICT LIABILITY), OR OTHERWISE FOR DAMAGE TO PROPERTY OR EQUIPMENT OTHER THAN THE PRODUCTS, INCLUDING LOSS OF PROFITS OR REVENUE, LOSS OF USE OF PRODUCTS, LOSS OF DATA, COST OF CAPITAL, CLAIMS OF CUSTOMERS OF THE END-USER OR ANY SPECIAL, INDIRECT, INCIDENTAL, OR CONSEQUENTIAL DAMAGES WHATSOEVER. THE TOTAL CUMULATIVE LIABILITY OF COMPANY HEREUNDER WHETHER THE CLAIMS ARE BASED IN CONTRACT (INCLUDING INDEMNITY), IN TORT (INCLUDING NEGLIGENCE OR STRICT LIABILITY), OR OTHERWISE, SHALL NOT EXCEED THOSE SET FORTH ABOVE.

Company shall not be responsible for failure to provide repair or replacement under this Guaranty due to causes beyond Company's reasonable control.

END-USER'S OBLIGATIONS: In order to receive the benefits of this Guaranty, the End-User must use the Product in a normal way; follow the Product's user's guide; and protect against further damage to the Product if there is a covered defect.

OTHER LIMITATIONS: Company's obligations under this Guaranty are expressly conditioned upon receipt by Company of all payments due to it (including interest charges, if any). During such time as Company has not received payment of any amount due to it for the Product, in accordance with the contract terms under which the Product is sold, Company shall have no obligation under this Guaranty.

COSTS NOT RELATED TO GUARANTY: The End-User shall be invoiced for, and shall pay for, all services not expressly provided for by the terms of this Guaranty, including without limitation, site calls involving an inspection that determines no corrective maintenance is required. Any costs for replacement equipment, installation, materials, freight charges, travel expenses, or labor of Company representatives outside the terms of this Guaranty will be borne by the End-User.

TO MAKE A CLAIM: In the USA, call the Customer Reliability Center 7x24 at 800-356-5737. Outside of the USA, contact your local Eaton product sales or service representative. For comments or questions about this Load Protection Guaranty, write to the Customer Quality Representative, 3301 Spring Forest Road, Raleigh, North Carolina 27616 USA.

ОФИЦИАЛЬНЫЙ ДИЛЕР В УКРАИНЕ:
storgom.ua

ГРАФИК РАБОТЫ:
Пн. – Пт.: с 8:30 по 18:30
Сб.: с 09:00 по 16:00
Вс.: с 10:00 по 16:00

КОНТАКТЫ:
+38 (044) 360-46-77
+38 (066) 77-395-77
+38 (097) 77-236-77
+38 (093) 360-46-77

Детальное описание товара:
https://storgom.ua/product/istochnikbespereboynogopitaniyaeaton5130-2500va.html
Другие товары: https://storgom.ua/istochniki-bespereboinogo-pitaniia-ibp.html