FEKA VS

SUBMERSIBLE PUMPS

TECHNICAL DATA

Operating range:
from 0 to 32 m^3/h with head up to 14 metres.
Pumped liquid: sewage water and used water in general, non aggressive.
Free passage: 50 mm.
Liquid temperature range:
- from 0 °C to +35 °C for domestic use (EN 60335-2-41).
- from 0 °C to +50 °C for other uses.

Maximum ambient temperature for operation with motor above water: +40 °C
Maximum immersion depth: 7 metres.
Motor protection class: IP 68
Insulation class: F
Standard voltage: 220-240 V - 50Hz single-phase.
380-415 V - 50Hz three-phase.
Power cable:
10 metre H07RN-F, with plug for the single-phase version.
Installation: fixed or portable, vertical position.

APPLICATIONS

Stainless steel submersible centrifugal pump with microcast steel liquid vortex impeller, suitable for lifting sewage and drain water in general containing solid matter with size up to 50 mm.

CONSTRUCTION FEATURES OF THE PUMP

AISI 304 stainless steel pump body, seal cover, motor cover, and cap with handle. Microcast steel impeller. Insulating rubber covered handle. AISI 316 stainless steel motor shaft. Double mechanical seal with interposed oil chamber (non-toxic oil) in carbon-alumina on the motor side, and silicon carbide/silicon carbide on the pump side.

CONSTRUCTION FEATURES OF THE MOTOR

Dry, asynchronous and waterproof motor, cooled by the pumped liquid. Rotor running on permanently lubricated ball bearings, selected to ensure low noise and durability. Overcurrent protection as standard for the single-phase version, optional for the three-phase version. Permanently connected capacitor in the single-phase version. Continuous duty with liquid temperature 35 °C and completely submerged pump. The single-phase version can be supplied with float for automatic operation. Power cable: 10 metre H07RN-F, with plug for the single-phase version.
Number of poles: 2
Max starts/hour: 20

MATERIALS

N.	PARTS*		MATERIALS
1	PUMP BODY		AISI 304 STAINLESS STEEL
4	IMPELLER		AISI 304 MICROCAST STEEL
7	MOTOR SHAFT		AISI 316 STAINLESS STEEL
16	MECHANICAL SEAL	PUMP SIDE	SILICON CARBIDE/SILICON CARBIDE
		MOTOR SIDE	CARBON/ALUMINA
36	SEAL COVER		AISI 304 STAINLESS STEEL
54	MOTOR CASING		AISI 304 STAINLESS STEEL
120	HANDLE		AISI 304 STAINLESS STEEL INSULATING RUBBER COATED

* In contact with the liquid

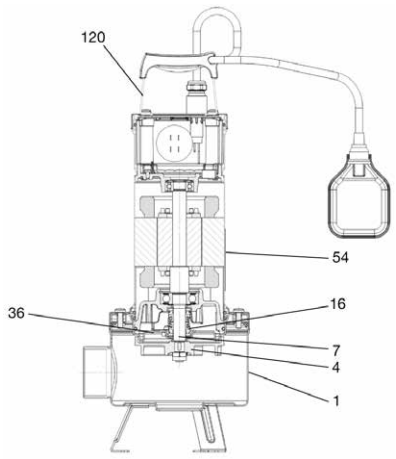

PERFORMANCE RANGE

The performance curves are based on kinematic viscosity values = 1 mm²/s and density equal to 1000 kg/m³. Curve tolerance according to ISO 9906.

GRAPHIC SELECTION TABLE

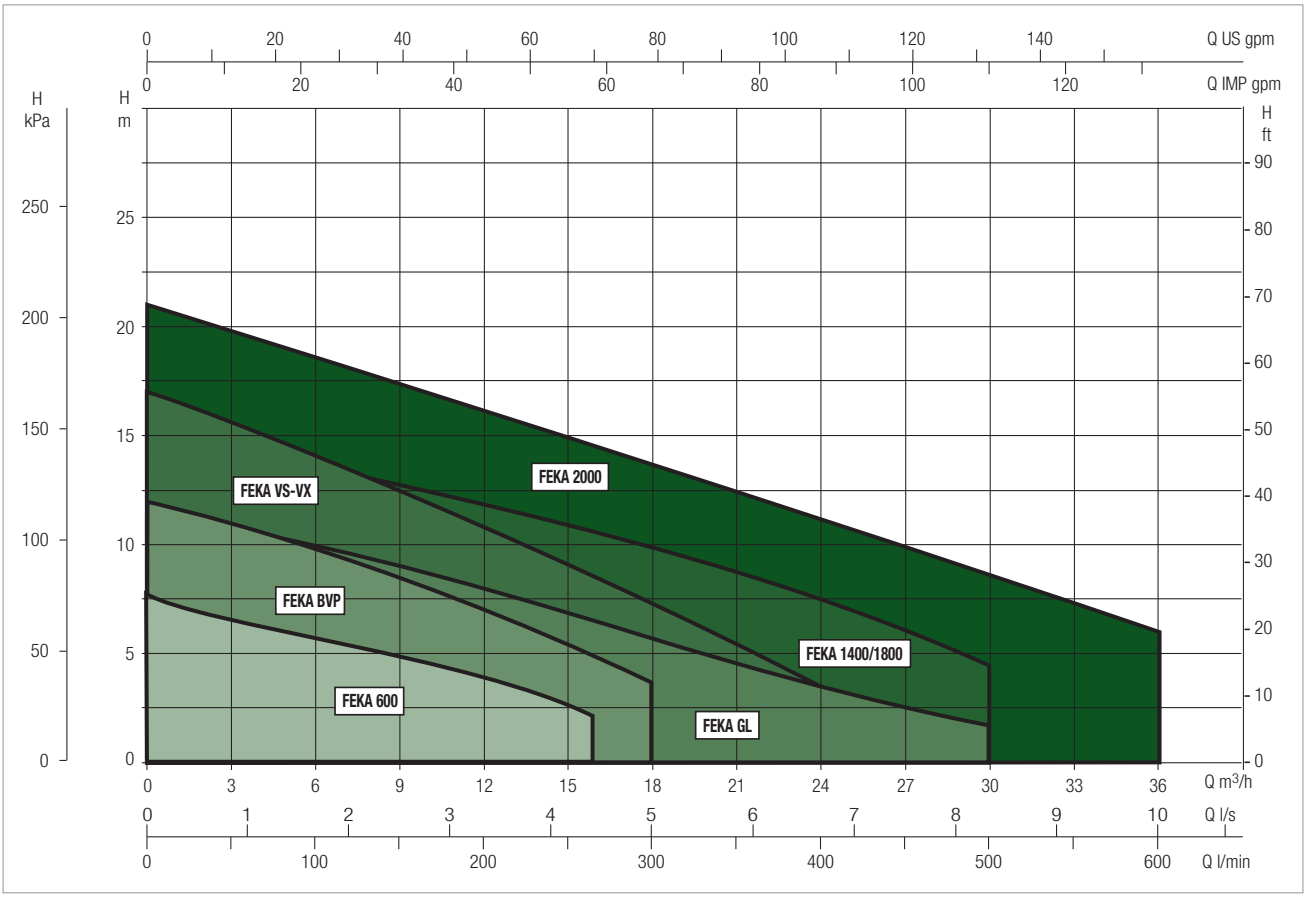

SELECTION TABLE - FEKA VS

MODEL	Q= m³/h	0	3	6	9	12	15	18	24	30	36
	Q=l/min	0	50	100	150	200	250	300	400	500	600
FEKA VS 550 M-T	H (m)	7.4	6.9	6.2	5.6	4.1	3.2	1.8			
FEKA VS 750 M-T		9.6	9.2	8.5	7.6	6.7	5.6	4.3	1.9		
FEKA VS 1000 M-T		11.8	11.3	10.5	9.8	9	8	6.8	4.1		
FEKA VS 1200 M-T		14	13.4	12.8	12	11.2	10.1	9	6.7		

DAB PUMPS reserves the right to make modifications without notice.

FEKA VS - SUBMERSIBLE PUMPS FOR LIFTING WASTE WATER

Liquid temperature range: from 0 °C to +35 °C for domestic use (EN 60335-2-41) - from 0 °C to +50 °C for the other uses.

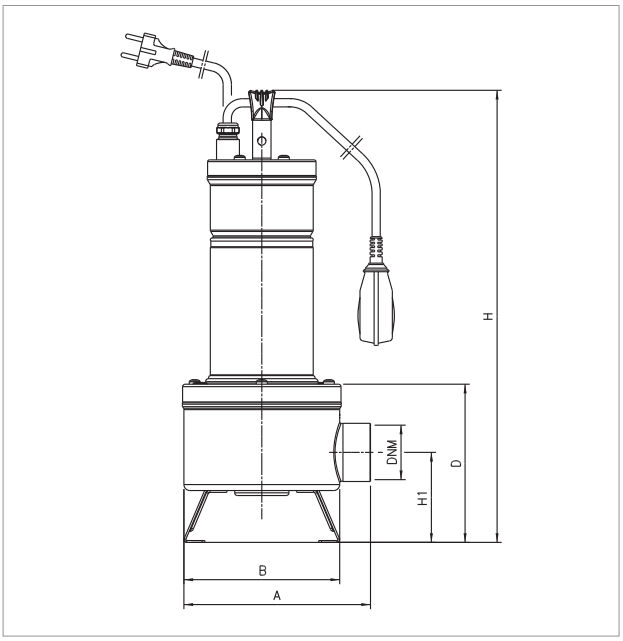

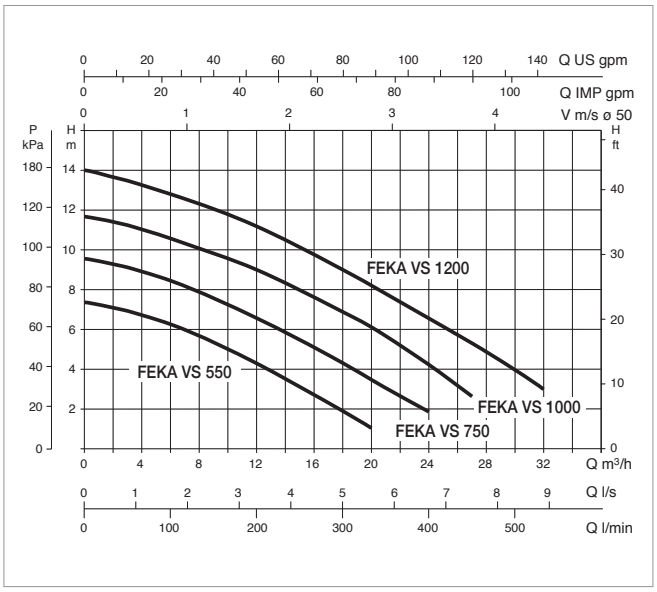

The performance curves are based on kinematic viscosity values = 1 mm²/s and density equal to 1000 kg/m³. Curve tolerance according to ISO 9906.

MODEL	ELECTRICAL DATA							
	POWER INPUT 50 Hz	P1 MAX W	P2 NOMINAL		In A	I st. A	CAPACITOR	
			kW	HP			µF	Vc
FEKA VS 550 M-NA	1 x 220 V -240 V ~	927	0.55	0.75	4.2	20	20	450
FEKA VS 550 M-A	1 x 220 V -240 V ~	927	0.55	0.75	4.2	20	20	450
FEKA VS 550 T-NA	3 x 400 V ~	900	0.55	0.75	1.64	11	-	-
FEKA VS 750 M-NA	1 x 220 V -240 V ~	1111	0.75	1	5.13	20	20	450
FEKA VS 750 M-A	1 x 220 V -240 V ~	1111	0.75	1	5.13	20	20	450
FEKA VS 750 T-NA	3 x 400 V ~	1038	0.75	1	1.94	11	-	-
FEKA VS 1000 M-NA	1 x 220 V -240 V ~	1469	1	1.36	6.63	31	25	450
FEKA VS 1000 M-A	1 x 220 V -240 V ~	1469	1	1.36	6.63	31	25	450
FEKA VS 1000 T-NA	3 x 400 V ~	1374	1	1.36	2.51	16	-	-
FEKA VS 1200 M-NA	1 x 220 V -240 V ~	1936	1.2	1.6	8.63	38	30	450
FEKA VS 1200 M-A	1 x 220 V -240 V ~	1936	1.2	1.6	8.63	38	30	450
FEKA VS 1200 T-NA	3 x 400 V ~	1865	1.2	1.6	3.44	22	-	-

MODEL	A	B	D	H	H1	Ø DNM	PACKING DIMENSIONS			VOLUME (m³)	WEIGHT kg
							L/A	L/B	H		
FEKA VS 550	203	170	172	492	98	2" F	240	600	240	0.034	16.3
FEKA VS 750	203	170	172	492	98	2" F	240	600	240	0.034	16.3
FEKA VS 1000	203	170	172	492	98	2" F	240	600	240	0.034	19.3
FEKA VS 1200	203	170	172	492	98	2" F	240	600	240	0.034	20.8

FIXED INSTALLATION

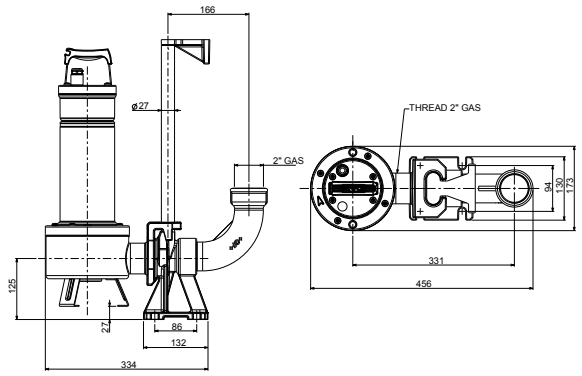

PORTABLE INSTALLATION

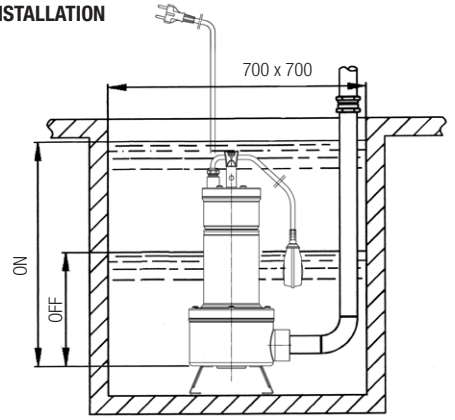

FEKA VX 550-750 ON 670 mm OFF 270 mm
FEKA VX 1000-1200 ON 700 mm OFF 300 mm

ОФИЦИАЛЬНЫЙ ДИЛЕР В УКРАИНЕ:
storgom.ua

ГРАФИК РАБОТЫ:
Пн. – Пт.: с 8:30 по 18:30
Сб.: с 09:00 по 16:00
Вс.: с 10:00 по 16:00

КОНТАКТЫ:
+38 (044) 360-46-77
+38 (066) 77-395-77
+38 (097) 77-236-77
+38 (093) 360-46-77

Детальное описание товара:
https://storgom.ua/product/fekalnyi-nasos-dab-feka-vs-7-0-m-na-1030400-0.html
Другие товары: https://storgom.ua/fekalnyye-nasosy.html