JETINOX

SELF-PRIMING CENTRIFUGAL ELECTRIC PUMPS

TECHNICAL DATA

Operating range:
from 0.4 to 10.5 m^3/h with head up to 62 metres.
Liquid quality requirements: clean, free from solid or abrasive contaminants, non-viscous, non-aggressive, uncrystallised and chemically neutral.
Liquid temperature range:
for domestic use: from 0°C to +35°C (EN 60335-2-41)
for other use: from 0°C to +40°C
Maximum suction depth: 8 metres.
Maximum ambient temperature: +50°C
Maximum operating pressure: 8 bar (800 kPa)
Installation: fixed in a horizontal position.
Special executions on request: alternative voltages and/or frequencies.
Motor protection rating: IP 44
Terminal block protection rating: IP 55
Insulation class: F
Standard input voltage: single phase 220-240 V / 50 Hz
three phase 230-400 V / 50 Hz

APPLICATIONS

Self priming centrifugal pump with excellent suction capacity even in the presence of air bubbles.
Suitable for pumping water with low levels of sandy impurities.
Especially used in domestic water supply installations.
Suitable for small farms and gardening, small scale industrial services and where self priming is necessary.

CONSTRUCTIONAL FEATURES OF THE PUMP

Pump body, seal holder cover and wear ring in stainless steel.
Motor support in die cast aluminium.
Impeller, diffuser, venturi tube in technopolymer.
Carbon/ceramic mechanical seal.

CONSTRUCTIONAL FEATURES OF THE MOTOR

Asynchronous type, closed, with external air cooling.
Rotor mounted on oversized greased-for-life ball bearings, to guarantee low noise and long life.
Incorporated thermo-amperometric protection and permanently inserted capacitor in the single phase version.
It is recommended to use overload protection for three phase motor protection, in compliance with current legislation.
Manufacture pursuant to CEI 2-3 and CEI 61-69 (EN 60335-2-41) standard.

MATERIALS

N°	PARTS *	MATERIALS
1	PUMP BODY	AISI 304 STAINLESS STEEL X5 CRNi 1810 - UNI 6900/71
4	IMPELLER	TECHNOPOLYMER A
7	SHAFT WITH ROTOR	AISI 416 STAINLESS STEEL X12 CrS13 - UNI 6900/71
16	MECHANICAL SEAL	CARBON/CERAMIC
28	OR GASKET	NBR RUBBER
36	SEAL HOLDER COVER	AISI 304 STAINLESS STEEL X5 CRNi 1810 - UNI 6900/71
160	VENTURI DIFFUSER NOZZEL GROUP	TECHNOPOLYMER A

* In contact with liquid

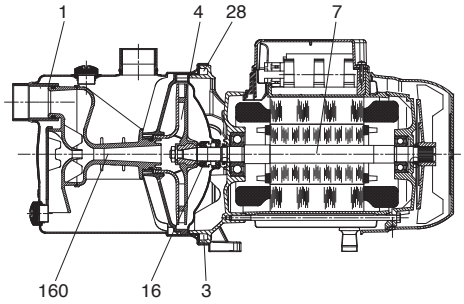

SELF PRIMING CAPACITY

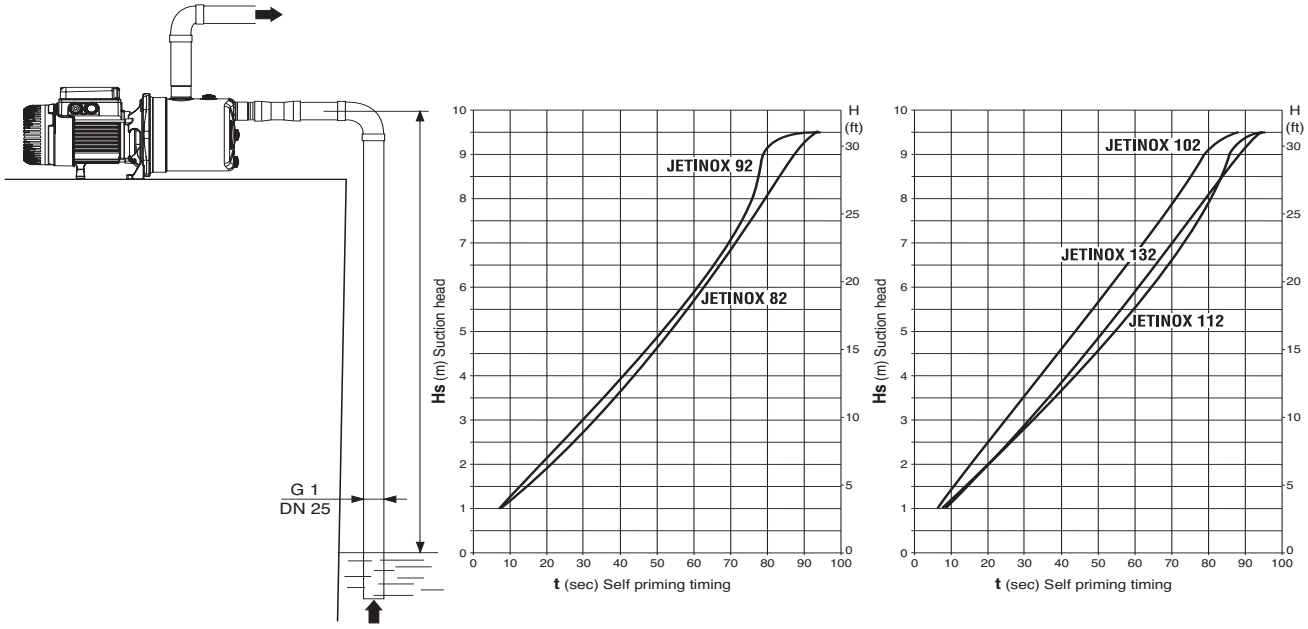

JETINOX

SELF-PRIMING CENTRIFUGAL ELECTRIC PUMPS

PERFORMANCE RANGE

The performance curves are based on kinematic viscosity values = 1 mm²/s and density equivalent to 1000 kg/m³. Curve tolerance according to ISO 9906.

GRAPHIC SELECTION TABLE

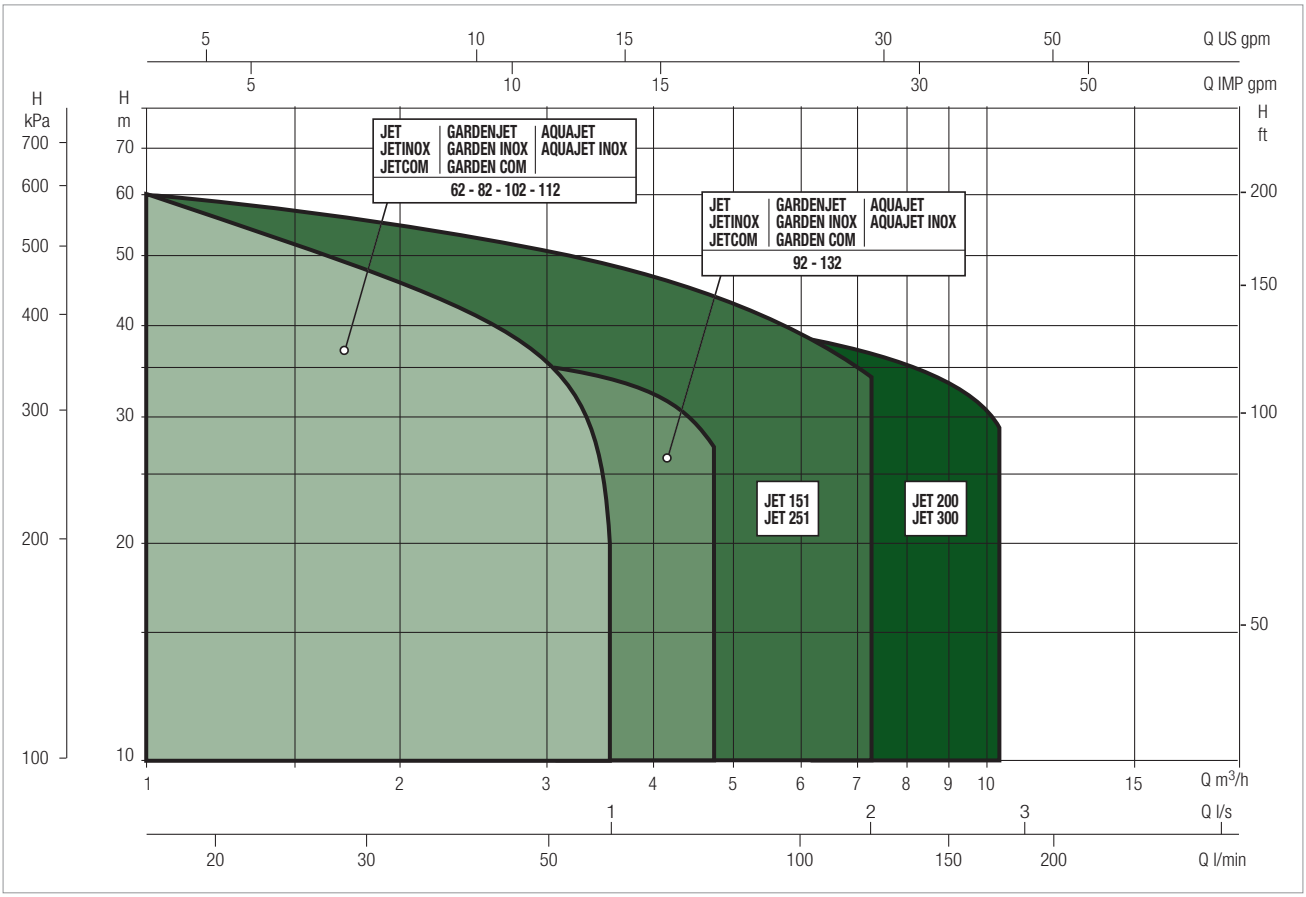

JETINOX SELECTION TABLE

MODEL	Q=m³/h	0	0.6	1.2	1.8	2.4	3.0	3.6	4.2	4.8
	Q=l/min	0	10	20	30	40	50	60	70	80
JETINOX 82 M	H (m)	47	40	34	30	26.2	23.5	20.3		
JETINOX 82 T		47	40	34	30	26.2	23.5	20.3		
JETINOX 102 M		53.8	47	41	36.3	32.4	28.8	25.8		
JETINOX 102 T		53.8	47	41	36.3	32.4	28.8	25.8		
JETINOX 112 M		61	54	47.8	42.8	38.8	34.8	20		
JETINOX 112 T		61	54	47.8	42.8	38.8	34.8	20		
JETINOX 92 M		36.2	33.5	31	28.4	26	24	21.8	19.6	17.5
JETINOX 132 M		48.3	45.6	42.8	40	37.6	35	32.5	30	27.2
JETINOX 132 T		48.3	45.6	42.8	40	37.6	35	32.5	30	27.2

DAB PUMPS reserve the right to make modifications without prior notice

JETINOX 82 - SELF-PRIMING CENTRIFUGAL ELECTRIC PUMPS FOR DOMESTIC WATER SUPPLY

Liquid temperature range pumped: from 0 °C to +35 °C - Maximum ambient temperature: +50°C

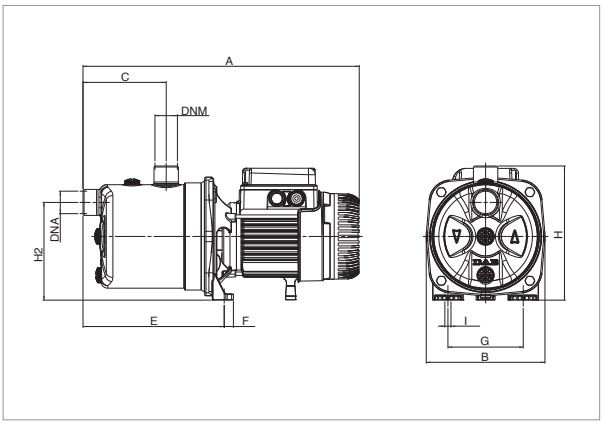

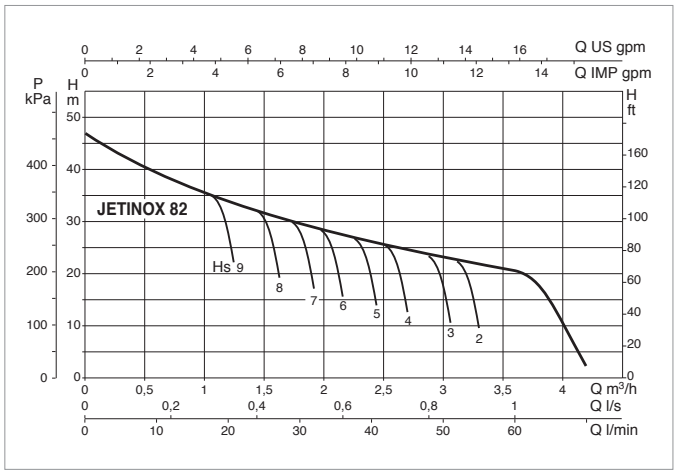

The performance curves are based on the kinematic viscosity values = 1 mm²/s and density equivalent to 1000 kg/m³. Curve tolerance according to ISO 9906.

MODEL	ELECTRICAL DATA						
	POWER SUPPLY 50 Hz	P1 MAX kW	P2 NOMINAL		In A	CAPACITOR	
			kW	HP		µF	Vc
JETINOX 82 M	1x220-240 V ~	0.85	0.6	0.8	3.8	12.5	450
JETINOX 82 T	3x230-400 V ~	0.86	0.6	0.8	2.8-1.6	–	–

MODEL	A	B	C	E	F	G	H	H1	H2	I Ø	L	DNA GAS	DNM GAS	PACK DIMENSIONS			VOLUME (mc)	GROSS WEIGHT Kg
														L/A	L/B	H		
JETINOX 82	406	174	122	207	14	111	197	–	144	9	–	1"	1"	470	240	240	0.027	7.8

JETINOX 102 - SELF-PRIMING CENTRIFUGAL ELECTRIC PUMPS FOR DOMESTIC WATER SUPPLY

Liquid temperature range pumped: from 0 °C to +35 °C - Maximum ambient temperature: +50°C

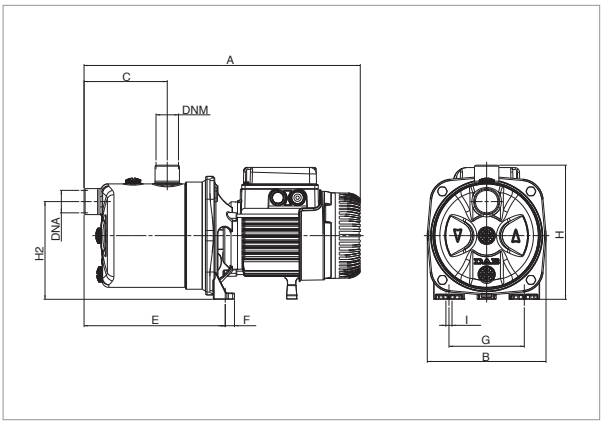

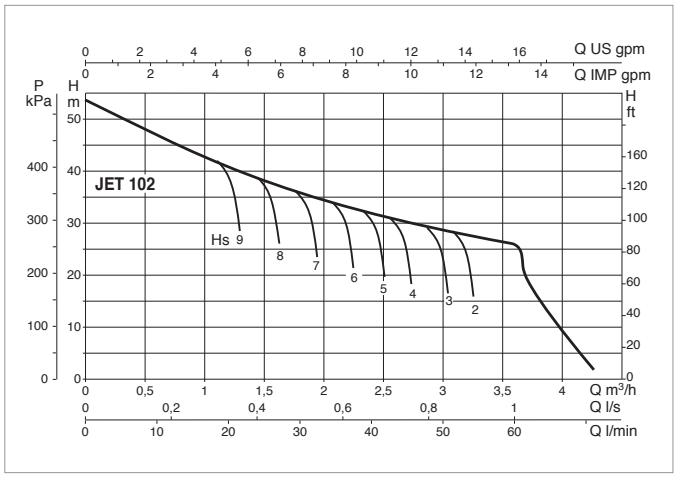

The performance curves are based on the kinematic viscosity values = 1 mm²/s and density equivalent to 1000 kg/m³. Curve tolerance according to ISO 9906.

MODEL	ELECTRICAL DATA						
	POWER SUPPLY 50 Hz	P1 MAX kW	P2 NOMINAL		In A	CAPACITOR	
			kW	HP		µF	Vc
JETINOX 102 M	1x220-240 V ~	1.13	0.75	1	5.1	16	450
JETINOX 102 T	3x230-400 V ~	1.04	0.75	1	3.3-1.9	–	--

MODEL	A	B	C	E	F	G	H	H1	H2	I Ø	L	DNA GAS	DNM GAS	PACK DIMENSIONS			VOLUME (mc)	GROSS WEIGHT Kg
														L/A	L/B	H		
JETINOX 102	424	174	122	207	14	111	197	–	144	9	–	1"	1"	470	240	240	0.027	9.6

JETINOX 112 - SELF-PRIMING CENTRIFUGAL ELECTRIC PUMPS FOR DOMESTIC WATER SUPPLY

Liquid temperature range pumped: from 0 °C to +35 °C - Maximum ambient temperature: +50°C

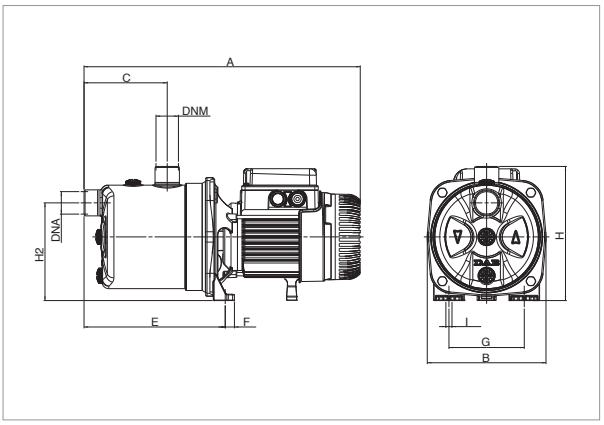

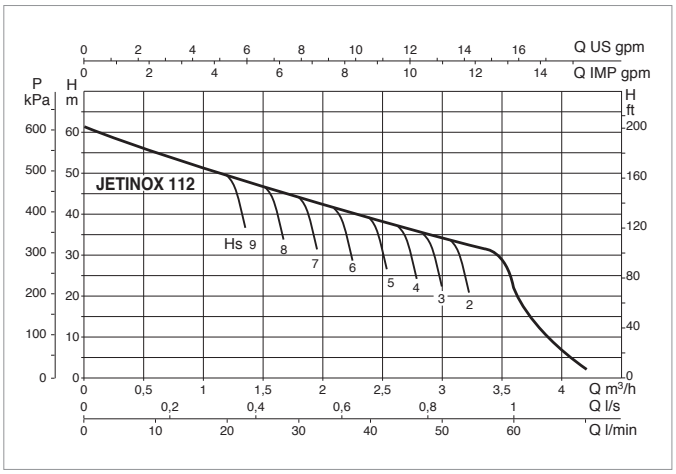

The performance curves are based on the kinematic viscosity values = 1 mm²/s and density equivalent to 1000 kg/m³. Curve tolerance according to ISO 9906.

MODEL	ELECTRICAL DATA						
	POWER SUPPLY 50 Hz	P1 MAX kW	P2 NOMINAL		In A	CAPACITOR	
			kW	HP		µF	Vc
JETINOX 112 M	1x220-240 V ~	1.4	1	1.36	6.2	25	450
JETINOX 112 T	3x230-400 V ~	1.35	1	1.36	4.3-2.5	–	–

MODEL	A	B	C	E	F	G	H	H1	H2	I Ø	L	DNA GAS	DNM GAS	PACK DIMENSIONS			VOLUME (mc)	GROSS WEIGHT Kg
														L/A	L/B	H		
JETINOX 112 M	424	174	122	207	14	111	197	–	144	9	–	1"	1"	470	240	240	0.027	10.6
JETINOX 112 T	440	174	122	207	14	111	197	–	144	9	–	1"	1"	470	240	240	0.027	11.7

JETINOX 92 - SELF-PRIMING CENTRIFUGAL ELECTRIC PUMPS FOR DOMESTIC WATER SUPPLY

Liquid temperature range pumped: from 0 °C to +35 °C - Maximum ambient temperature: +50°C

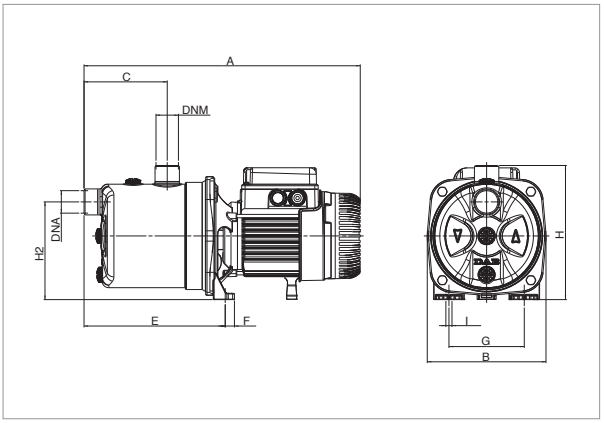

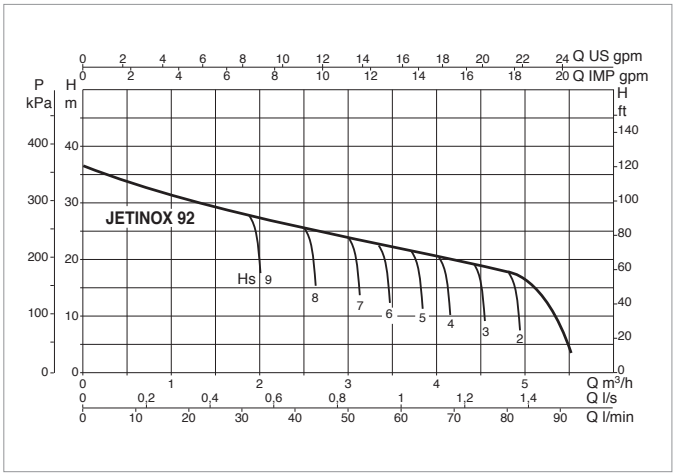

The performance curves are based on the kinematic viscosity values = 1 mm²/s and density equivalent to 1000 kg/m³. Curve tolerance according to ISO 9906.

MODEL	ELECTRICAL DATA						
	POWER SUPPLY 50 Hz	P1 MAX kW	P2 NOMINAL		In A	CAPACITOR	
			kW	HP		µF	Vc
JETINOX 92 M	1x220-240 V ~	0.94	0.75	1	4.2	14	450

MODEL	A	B	C	E	F	G	H	H1	H2	I Ø	L	DNA GAS	DNM GAS	PACK DIMENSIONS			VOLUME (mc)	GROSS WEIGHT Kg
														L/A	L/B	H		
JETINOX 92	406	174	122	207	14	111	197	–	144	9	–	1"	1"	470	240	240	0.027	8.8

JETINOX 132 - SELF-PRIMING CENTRIFUGAL ELECTRIC PUMPS FOR DOMESTIC WATER SUPPLY

Liquid temperature range pumped: from 0 °C to +35 °C - Maximum ambient temperature: +50°C

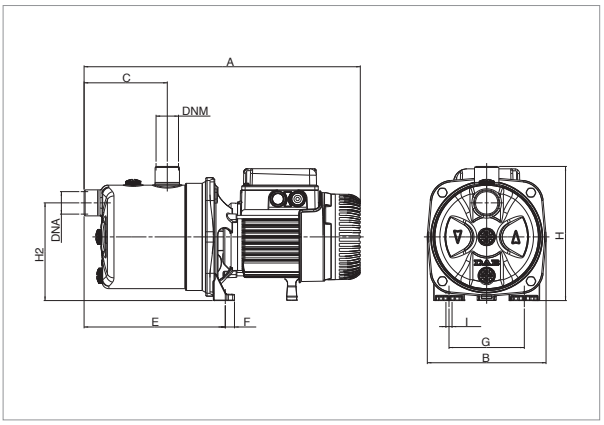

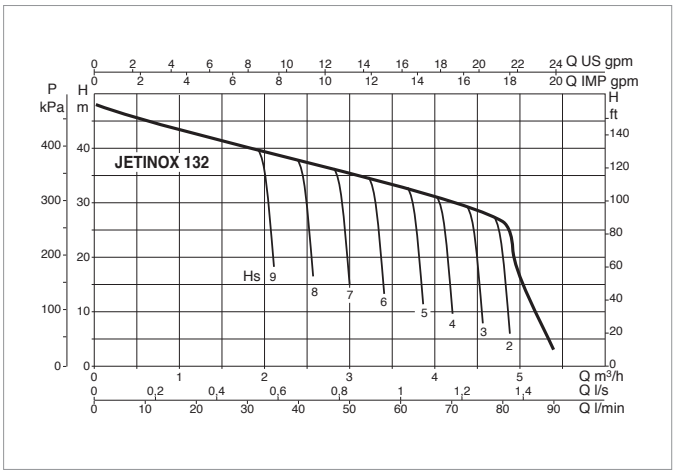

The performance curves are based on the kinematic viscosity values = 1 mm^2/s and density equivalent to 1000 kg/m^3. Curve tolerance according to ISO 9906.

MODEL	ELECTRICAL DATA						
	POWER SUPPLY 50 Hz	P1 MAX kW	P2 NOMINAL		In A	CAPACITOR	
			kW	HP		µF	Vc
JETINOX 132 M	1x220-240 V ~	1.49	1	1.36	6.6	25	450
JETINOX 132 T	3x230-400 V ~	1.43	1	1.36	4.7-2.7	–	–

MODEL	A	B	C	E	F	G	H	H1	H2	I Ø	L	DNA GAS	DNM GAS	PACK DIMENSIONS			VOLUME (mc)	GROSS WEIGHT Kg
														L/A	L/B	H		
JETINOX 132 M	424	174	122	207	14	111	197	–	144	9	–	1"	1"	470	240	240	0.027	10.6
JETINOX 132 T	440	174	122	207	14	111	197	–	144	9	–	1"	1"	470	240	240	0.027	12.6

DAB PUMPS reserve the right to make modifications without prior notice

ОФИЦИАЛЬНЫЙ ДИЛЕР В УКРАИНЕ:
storgom.ua

ГРАФИК РАБОТЫ:
Пн. – Пт.: с 8:30 по 18:30
Сб.: с 09:00 по 16:00
Вс.: с 10:00 по 16:00

КОНТАКТЫ:
+38 (044) 360-46-77
+38 (066) 77-395-77
+38 (097) 77-236-77
+38 (093) 360-46-77

Детальное описание товара:
https://storgom.ua/product/poverhnostnyi-nasos-dab-jetinox-82-t-1026400-0.html
Другие товары: https://storgom.ua/samovsasyvayushchiye-nasosy.html