Operating Instructions and Parts Manual
12x21-inch EVS Woodworking Lathe
Model JWL-1221VS

JET
427 New Sanford Road
LaVergne, Tennessee 37086
Ph.: 800-274-6848
www.jettools.com

Part No. M-719200
Revision C2 05/2017
Copyright © 2017 JET

1.0 **Warranty and Service**

JET warrants every product it sells against manufacturers' defects. If one of our tools needs service or repair, please contact Technical Service by calling 1-800-274-6846, 8AM to 5PM CST, Monday through Friday.

Warranty Period
The general warranty lasts for the time period specified in the literature included with your product or on the official JET branded website.

- JET products carry a limited warranty which varies in duration based upon the product. (See chart below)
- Accessories carry a limited warranty of one year from the date of receipt.
- Consumable items are defined as expendable parts or accessories expected to become inoperable within a reasonable amount of use and are covered by a 90 day limited warranty against manufacturer's defects.

Who is Covered
This warranty covers only the initial purchaser of the product from the date of delivery.

What is Covered
This warranty covers any defects in workmanship or materials subject to the limitations stated below. This warranty does not cover failures due directly or indirectly to misuse, abuse, negligence or accidents, normal wear-and-tear, improper repair, alterations or lack of maintenance. JET woodworking machinery is designed to be used with Wood. Use of these machines in the processing of metal, plastics, or other materials may void the warranty. The exceptions are acrylics and other natural items that are made specifically for wood turning.

Warranty Limitations
Woodworking products with a Five Year Warranty that are used for commercial or industrial purposes default to a Two Year Warranty. Please contact Technical Service at 1-800-274-6846 for further clarification.

How to Get Technical Support
Please contact Technical Service by calling 1-800-274-6846. **Please note that you will be asked to provide proof of initial purchase when calling.** If a product requires further inspection, the Technical Service representative will explain and assist with any additional action needed. JET has Authorized Service Centers located throughout the United States. For the name of an Authorized Service Center in your area call 1-800-274-6846 or use the Service Center Locator on the JET website.

More Information
JET is constantly adding new products. For complete, up-to-date product information, check with your local distributor or visit the JET website.

How State Law Applies
This warranty gives you specific legal rights, subject to applicable state law.

Limitations on This Warranty
JET LIMITS ALL IMPLIED WARRANTIES TO THE PERIOD OF THE LIMITED WARRANTY FOR EACH PRODUCT. EXCEPT AS STATED HEREIN, ANY IMPLIED WARRANTIES OF MERCHANTABILITY AND FITNESS FOR A PARTICULAR PURPOSE ARE EXCLUDED. SOME STATES DO NOT ALLOW LIMITATIONS ON HOW LONG AN IMPLIED WARRANTY LASTS, SO THE ABOVE LIMITATION MAY NOT APPLY TO YOU.
JET SHALL IN NO EVENT BE LIABLE FOR DEATH, INJURIES TO PERSONS OR PROPERTY, OR FOR INCIDENTAL, CONTINGENT, SPECIAL, OR CONSEQUENTIAL DAMAGES ARISING FROM THE USE OF OUR PRODUCTS. SOME STATES DO NOT ALLOW THE EXCLUSION OR LIMITATION OF INCIDENTAL OR CONSEQUENTIAL DAMAGES, SO THE ABOVE LIMITATION OR EXCLUSION MAY NOT APPLY TO YOU.

JET sells through distributors only. The specifications listed in JET printed materials and on official JET website are given as general information and are not binding. JET reserves the right to effect at any time, without prior notice, those alterations to parts, fittings, and accessory equipment which they may deem necessary for any reason whatsoever. JET® branded products are not sold in Canada by JPW Industries, Inc.

Product Listing with Warranty Period

90 Days – Parts; Consumable items
1 Year – Motors; Machine Accessories
2 Year – Metalworking Machinery; Electric Hoists, Electric Hoist Accessories; Woodworking Machinery used for industrial or commercial purposes
5 Year – Woodworking Machinery
Limited Lifetime – JET Parallel clamps; VOLT Series Electric Hoists; Manual Hoists; Manual Hoist Accessories; Shop Tools; Warehouse & Dock products; Hand Tools; Air Tools

NOTE: JET is a division of JPW Industries, Inc. References in this document to JET also apply to JPW Industries, Inc., or any of its successors in interest to the JET brand.

2.0 Table of contents

Section **Page**

1.0 Warranty and Service 2
2.0 Table of contents 3
3.0 Safety warnings 4
4.0 About this manual 5
5.0 Features and nomenclature – JWL-1221VS lathe 6
6.0 Specifications – JWL-1221VS lathe 7
6.1 Hole pattern – JWL-1221VS lathe 8
7.0 Setup and assembly 9
7.1 Shipping contents 9
7.2 Mounting lathe to stand/table 9
7.3 Installing tool caddies 9
7.4 Installing/removing face plate 9
7.5 Installing/removing spur center 10
7.6 Installing/removing live center 10
8.0 Electrical connections 11
8.1 Grounding instructions 11
8.2 Extension cords 11
9.0 Adjustments 12
9.1 Tool rest 12
9.2 Tailstock 12
9.3 Speed Change 12
9.4 Index pin 13
10.0 Operating controls 13
11.0 Operation 14
11.1 Inspection 14
11.2 Turning Tools 14
11.3 Spindle Turning 15
11.4 Face Plate and Bowl Turning 17
11.5 Bowl Turning Techniques 18
12.0 Maintenance 19
12.1 General maintenance 19
12.2 Motor Brushes 20
12.3 Belt replacement 20
13.0 Recommended Lathe Speeds (per diameter of workpiece) 21
14.0 Optional accessories 22
15.0 Troubleshooting the JWL-1221VS Lathe 23
16.0 Replacement Parts 24
16.1.1 Bed Assembly – Exploded View 25
16.1.2 Bed Assembly – Parts List 26
16.2.1 Headstock Assembly – Exploded View 28
16.2.2 Headstock Assembly – Parts List 29
16.3.1 Controller Assembly – Exploded View 30
16.3.2 Controller Assembly – Parts List 30
17.0 Electrical Connections 31

3.0 Safety warnings

1. Read and understand the entire owner's manual before attempting assembly or operation.
2. Read and understand the warnings posted on the machine and in this manual. Failure to comply with all of these warnings may cause serious injury.
3. Replace the warning labels if they become obscured or removed.
4. This lathe is designed and intended for use by properly trained and experienced personnel only. If you are not familiar with the proper and safe operation of a lathe, do not use until proper training and knowledge have been obtained.
5. Do not use this lathe for other than its intended use. Do not turn materials other than wood on this lathe. If used for other purposes, JET disclaims any real or implied warranty and holds itself harmless from any injury that may result from that use.
6. Always wear approved safety glasses/face shields while using this lathe. Everyday eyeglasses only have impact resistant lenses; they are not safety glasses.
7. Before operating this lathe, remove tie, rings, watches and other jewelry, and roll sleeves up past the elbows. Remove all loose clothing and confine long hair. Non-slip footwear or anti-skid floor strips are recommended. Do not wear gloves.
8. WARNING: Drilling, sawing, sanding or machining wood products generates wood dust and other substances known to the State of California to cause cancer. Avoid inhaling dust generated from wood products or use a dust mask or other safeguards to avoid inhaling dust generated from wood products.
9. Wood products emit chemicals known to the State of California to cause birth defects or other reproductive harm. (California Health and Safety Code Section 25249.6)
10. Do not operate this machine while tired or under the influence of drugs, alcohol or any medication.
11. Make certain the switch is in the OFF position before connecting the machine to the power supply.
12. Make certain the machine is properly grounded.
13. Make all machine adjustments or maintenance with machine unplugged from power source.
14. Remove adjusting keys and wrenches. Form a habit of checking to see that keys and adjusting wrenches are removed from the machine before turning it on.
15. Keep safety guards in place at all times when the machine is in use. If removed for maintenance purposes, use extreme caution and replace the guards immediately after completion of maintenance.
16. Check damaged parts. Before further use of the machine, a guard or other part that is damaged should be carefully checked to determine that it will operate properly and perform its intended function. Check for alignment of moving parts, binding of moving parts, breakage of parts, mounting and any other conditions that may affect its operation. A guard or other part that is damaged should be properly repaired or replaced.
17. Provide for adequate space surrounding work area and non-glare, overhead lighting.
18. Keep the floor around the machine clean and free of scrap material, oil and grease.
19. Keep visitors a safe distance from the work area. Keep children away.
20. Make your workshop child proof with padlocks, master switches or by removing starter keys.
21. Give your work undivided attention. Looking around, carrying on a conversation and “horse-play” are careless acts that can result in serious injury.
22. Maintain a balanced stance at all times so that you do not fall into the spindle or other moving parts. Do not overreach or use excessive force to perform any machine operation.
23. Use the right tool at the correct speed and feed rate. Do not force a tool or attachment to do a job for which it was not designed. The right tool will do the job better and more safely.
24. Use recommended accessories; improper accessories may be hazardous.
25. Maintain tools with care. Keep turning chisels sharp and clean for the best and safest performance. Follow instructions for lubricating and changing accessories.
26. Turn off the machine before cleaning. Use a brush or compressed air to remove chips or debris — do not use your hands.
27. Do not stand on the machine. Serious injury could occur if the machine tips over.
28. Never leave the machine running unattended. Turn the power off and do not leave the machine until it comes to a complete stop.

29. Remove loose items and unnecessary work pieces from the area before starting the machine.
30. Don't use in dangerous environment. Don't use power tools in damp or wet location, or expose them to rain. Keep work area well lighted.
31. Check the workpiece carefully for splits, knots or other obstructions which may cause a safety risk while turning.
32. Adjust tool rest to proper height and position for the work. Rotate the workpiece by hand to check clearance with the tool rest before turning on the machine.
33. Select the appropriate speed for the turning job at hand. Start at low speed and allow the Lathe to ramp up to operating speed.
34. Never apply coolants or water to a spinning workpiece.
35. Never stop a rotating workpiece with your hand.
36. If gluing up a workpiece, always use a high-quality glue of the type necessary for that particular workpiece.

Familiarize yourself with the following safety notices used in this manual:

⚠CAUTION This means that if precautions are not heeded, it may result in minor injury and/or possible machine damage.

⚠WARNING This means that if precautions are not heeded, it may result in serious injury or possibly even death.

4.0 About this manual

This manual is provided by JET covering the safe operation and maintenance procedures for a JET Model JWL-1221VS Lathe. This manual contains instructions on installation, safety precautions, general operating procedures, maintenance instructions and parts breakdown. Your machine has been designed and constructed to provide consistent, long-term operation if used in accordance with the instructions as set forth in this document.

This manual is not intended to be an exhaustive guide to lathe operational methods, use of accessories, choice of stock, etc. Additional knowledge can be obtained from experienced users or trade articles. Whatever accepted methods are used, always make personal safety a priority.

If there are questions or comments, please contact your local supplier or JET. JET can also be reached at our web site: www.jettools.com.

Retain this manual for future reference. If the machine transfers ownership, the manual should accompany it.

⚠WARNING Read and understand the entire contents of this manual before attempting assembly or operation! Failure to comply may cause serious injury!

Register your product using the mail-in card provided, or register online: http://www.jettools.com

5.0 **Features and nomenclature** – JWL-1221VS lathe

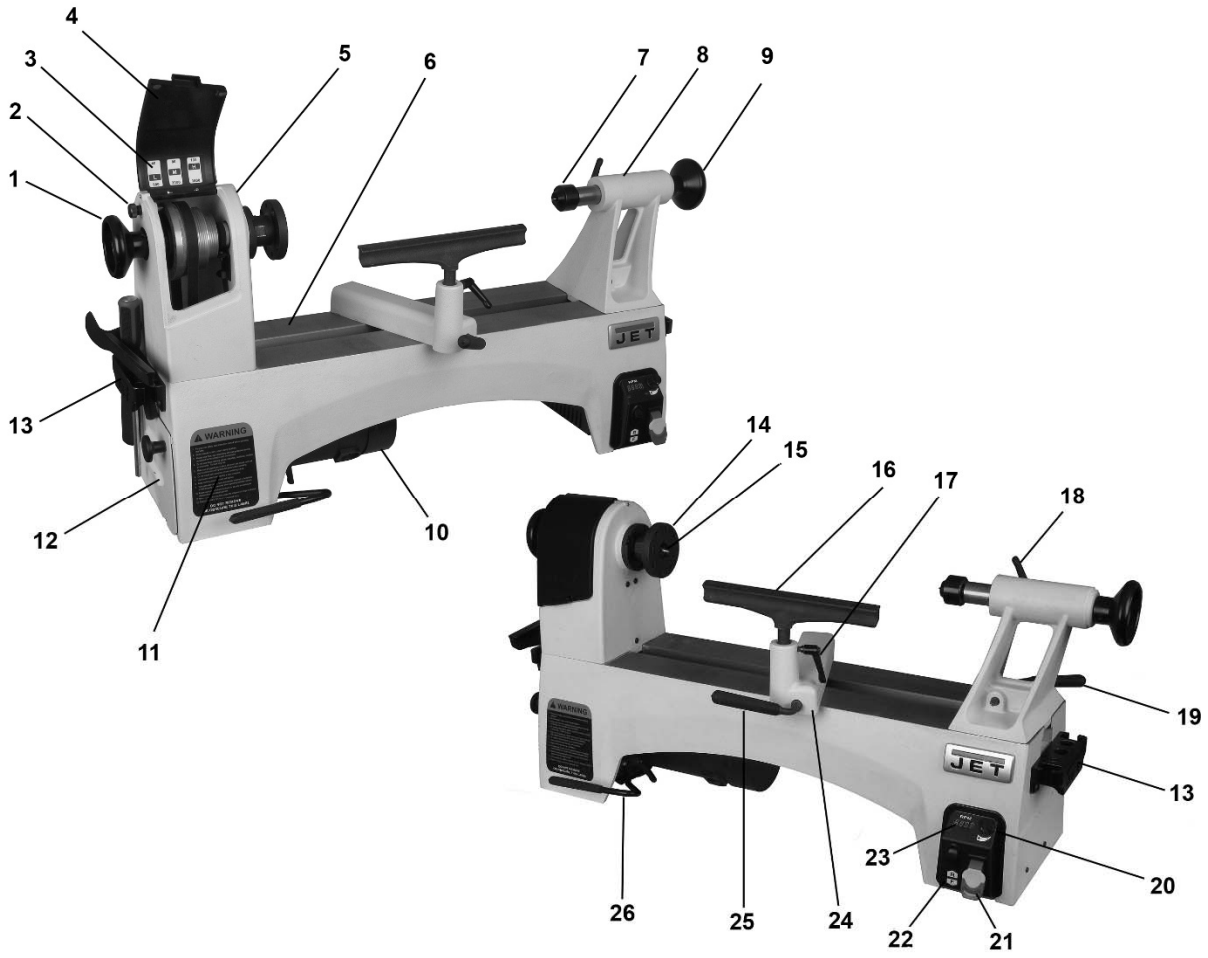

Figure 1

1. Spindle handwheel
2. Index pin
3. Speed chart
4. Upper pulley access door
5. Headstock
6. Bed
7. Live center
8. Tailstock
9. Tailstock handwheel
10. DC motor
11. Warning label
12. Lower pulley access door
13. Tool caddy
14. Faceplate
15. Spur center
16. Tool rest
17. Tool rest locking handle
18. Quill locking handle
19. Tailstock locking handle
20. Variable speed dial (potentiometer)
21. On/off switch with safety key
22. Forward/reverse switch
23. RPM digital readout
24. Tool rest base
25. Tool rest base locking handle
26. Belt tension release lever

6.0 **Specifications** – JWL-1221VS lathe

Model number	JWL-1221VS
Stock number	719200

Motor and electricals:

Motor type	120V DC
Horsepower	1 HP
Phase	single
Voltage	115V only
Cycle	60Hz
Listed FLA (full load amps)	6 A
Power transfer	belt
On/off switch	paddle style with safety key
Power cord length	6 ft. (183cm)
Power plug installed	yes
Recommended circuit size[1]	10A

[1] *subject to local/national electrical codes.*

Capacities:

Swing over bed	12.5” (318 mm)
Swing over tool rest base	9.45” (240 mm)
Distance between centers	20.5” (520 mm)
Faceplate diameter	3” (76 mm)

Headstock:

Spindle taper	MT2
Spindle thread	1”- 8TPI
Spindle bore	3/8” (9.5 mm)
Number of spindle speed ranges	3
Spindle speed ranges	60-900, 110-1800, 220-3600
Number of indexing positions	24

Tailstock:

Quill taper	MT2
Maximum quill travel	2-1/4” (57 mm)
Hole through tailstock	3/8” (9.5 mm)

Materials:

Bed	cast iron
Headstock	cast iron and steel
Tailstock	cast iron and steel
Tool support	cast iron
Tool support base	cast iron

Dimensions:

Bed width	6-5/8” (168 mm)
Height, floor to spindle centerline	14.75” (375 mm)
Stand footprint	30-1/2”L x 9”W (775 x 229 mm)
Tool support post diameter	5/8” (15.9 mm)
Overall dimensions, assembled	33.6”L x 11”W x 17.7”H (853 x 280 x 450 mm)
Overall dimensions of shipping carton	35.82”L x 14.56”W x 21.25”H (910 x 370 x 540 mm)

Weights:

Net	55 kg (121.25 lb)
Shipping	62 kg (136.69 lb)

The specifications in this manual were current at time of publication, but because of our policy of continuous improvement, JET reserves the right to change specifications at any time and without prior notice, without incurring obligations.

6.1 **Hole pattern – JWL-1221VS lathe**

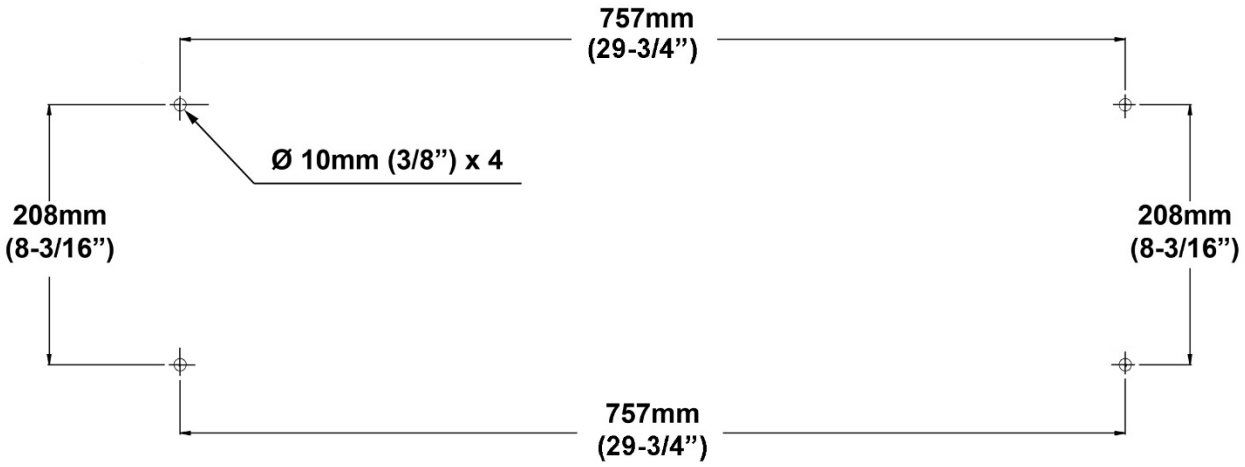

Figure 2
Clearance hole spacing for mounting lathe

7.0 Setup and assembly

Open shipping container and check for shipping damage. Report any damage immediately to your distributor and shipping agent. Do not discard any shipping material until the Lathe is assembled and running properly.

Compare the contents of your container with the following parts list to make sure all parts are intact. Missing parts, if any, should be reported to your distributor. Read the instruction manual thoroughly for assembly, maintenance and safety instructions.

7.1 Shipping contents

Carton contents *(see Figure 3)*

1 Lathe
1 Live center – A
1 Spur center – B
1 Spindle Wrench – C
1 Knockout rod – D
2 Tool caddies – E
4 Button head screws, 5/16 x 1/2 – F
2 Tool Supports, 6” and 10” – G
1 Face Plate, 3” – H
1 Owner’s manual
1 Product registration card

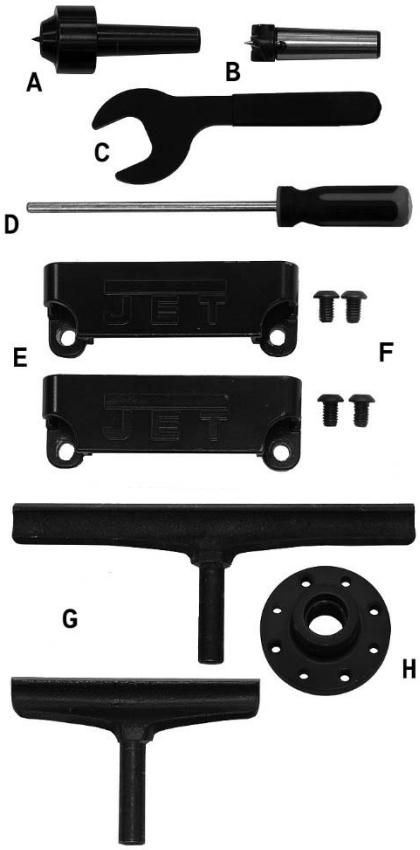

Figure 3

Tools required for assembly:

3/16” hex key (“Allen” wrench)

Exposed metal areas of the lathe, such as bed, spindle and quill, have been factory coated with a protectant. This should be removed with a soft cloth and a cleaner-degreaser. Clean the bed areas under the headstock, tailstock and tool support base. Do not use an abrasive pad, and do not allow solvents to contact painted or plastic areas.

7.2 Mounting lathe to stand/table

For effective and safe operation, the lathe must be mounted to the optional stand (see *section 14.0*) or a work table, using the four threaded holes in its base (5/16-18 UNC threads). See *section 6.1* for correct spacing of the holes to be drilled in the worktable.

7.3 Installing tool caddies

Referring to Figure 4:

1. Mount a tool caddy to each end of lathe with two 5/16 x 1/2 button head screws.

Figure 4

7.4 Installing/removing face plate

Referring to Figure 5:

1. Make sure the two setscrews in the faceplate have been backed out (3 mm hex key).
2. Push in spindle lock (A) and rotate spindle using handwheel, until spindle lock engages. Continue holding spindle lock in place.
3. Mount face plate by screwing it clockwise as far as it will go onto spindle threads.
4. Tighten the two set screws (B).
5. Release spindle lock.

⚠WARNING If you will be operating lathe in reverse, make sure both setscrews in faceplate (or chuck, or other accessory) are tight. Failure to comply can cause the faceplate to loosen, and may result in serious injury.

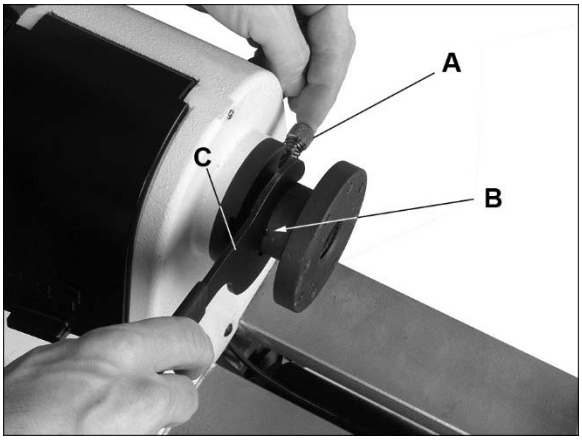

Figure 5

To remove faceplate:

6. Back out both set screws (B, Figure 5) in the faceplate.

   ⚠CAUTION Do not try to remove faceplate unless set screws are backed out, or stripping of faceplate threads may occur.

7. Engage spindle lock (A).
8. Place wrench (C) over flats, and turn to unscrew faceplate.

7.5 Installing/removing spur center

Referring to Figure 6:

1. Make sure mating surfaces of spur center and spindle are clean.
2. Drive spur center into workpiece. (See *section 11.3.1*)
3. Push spur center into spindle. NOTE: You do not need to remove faceplate to install spur center.

Figure 6

To remove spur center (Figure 7):

Hold spur center to prevent it from falling. (You may wish to use a rag to protect your hand from the sharp edges). Use knockout rod through spindle hole to tap out spur center.

Figure 7

7.6 Installing/removing live center

Referring to Figure 8:

1. Rotate tailstock handwheel clockwise a few times to advance quill.
2. Push live center into quill.

To remove live center:

3. Hold on to live center to prevent it from falling.
4. Rotate handwheel counterclockwise to retract quill, until center releases from quill.

Figure 8

8.0 Electrical connections

The JWL-1221VS JET lathe is rated for 115 volt operation. It is supplied with a plug designed for use on a circuit with a *grounded outlet* that looks like the one pictured in **A**, Figure 9.

Before connecting to power source, be sure switch is in *off* position.

It is recommended that the lathe be connected to a dedicated 10 amp circuit with a circuit breaker or time-delay fuse. **Local codes take precedence over recommendations.**

8.1 Grounding instructions

1. All Grounded, Cord-connected Tools:

In the event of a malfunction or breakdown, grounding provides a path of least resistance for electric current to reduce the risk of electric shock. This tool is equipped with an electric cord having an equipment-grounding conductor and a grounding plug. The plug must be plugged into a matching outlet that is properly installed and grounded in accordance with all local codes and ordinances.

Do not modify the plug provided - if it will not fit the outlet, have the proper outlet installed by a qualified electrician.

Improper connection of the equipment-grounding conductor can result in a risk of electric shock. The conductor with insulation having an outer surface that is green with or without yellow stripes is the equipment-grounding conductor. If repair or replacement of the electric cord or plug is necessary, do not connect the equipment-grounding conductor to a live terminal.

⚠WARNING **Check with a qualified electrician or service personnel if the grounding instructions are not completely understood, or if in doubt as to whether the tool is properly grounded. Failure to comply may cause serious or fatal injury.**

Use only 3-wire extension cords that have 3-prong grounding plugs and 3-pole receptacles that accept the tool's plug.

Repair or replace damaged or worn cord immediately.

2. Grounded, cord-connected tools intended for use on a supply circuit having a nominal rating ***less than 150*** *volts:*

This tool is intended for use on a circuit that has an outlet that looks like the one illustrated in **A,** Figure 9. An adapter, shown in **B** and **C**, may be used to connect this plug to a 2-pole receptacle as shown in **B** if a properly grounded outlet is not available. The temporary adapter should be used only until a properly grounded outlet can be installed by a qualified electrician. *This adapter is not permitted in Canada.* The green-colored rigid ear, lug, and the like, extending from the adapter must be connected to a permanent ground such as a properly grounded outlet box.

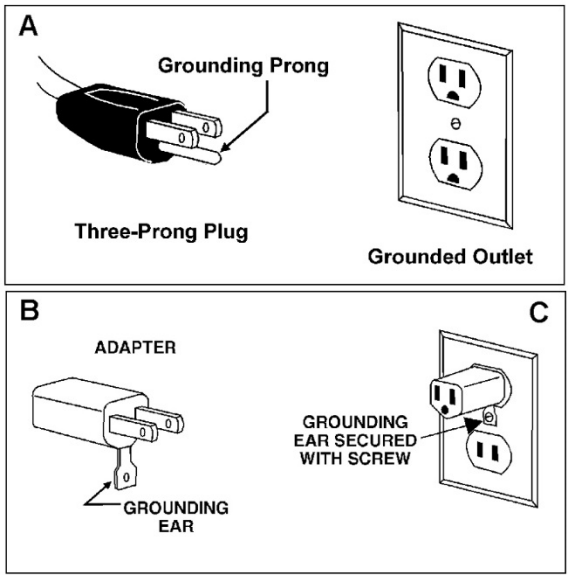

Figure 9

8.2 Extension cords

The use of extension cords is discouraged. Try to position equipment within reach of the power source. If an extension cord becomes necessary, be sure to use one heavy enough to carry the current your product will draw. An undersized cord will cause a drop in line voltage resulting in loss of power and overheating. Table 1 shows correct size to use depending on cord length and nameplate ampere rating. If in doubt, use the next heavier gauge. The smaller the gauge number, the heavier the cord.

Ampere Rating		**Volts**	**Total length of cord in feet**			
More Than	Not More Than	120 240	25 50	50 100	100 200	150 300
			AWG			
0	6		18	16	16	14
6	10		18	16	14	12
10	12		16	16	14	12
12	16		14	12	Not Recommended	

Extension Cord Recommendations
Table 1

9.0 Adjustments

WARNING **Make sure all levers and locking handles are tightened before operating the lathe.**

9.1 Tool rest

Referring to Figure 10:

The tool rest assembly is designed to allow adjustment for height, position on the bed, and angle to the work.

Loosen locking handle (A) on tool rest base to slide base forward or back, and to angle it to the bed. Tighten locking handle firmly before operating lathe.

Loosen small handle (B) to raise or lower tool rest and angle it to the work. Tighten handle before operating lathe.

Figure 10

9.2 Tailstock

Referring to Figures 11 and 12:

Loosen locking lever (C) and slide tailstock into position. Retighten locking lever.

WARNING **Do not position edge of tailstock off end of bed. This will result in less clamping surface and may increase risk of injury.**

To remove tailstock, loosen lever (C) and slide tailstock off end of bed.

Handle (D) locks and unlocks tailstock quill. (The handle is adjustable – lift up on handle and rotate it on pin, then release, making sure it seats itself on the pin.)

Handwheel (E) advances and retracts quill.

NOTE: If quill is well advanced and won't respond to handwheel rotation, push quill toward handwheel until it engages.

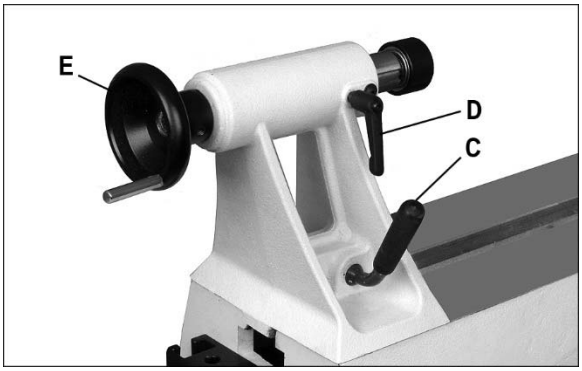

Figure 11

The clamping system has been properly adjusted by the manufacturer. If in the future it does not properly lock tailstock in position, remove tailstock from bed, and turn it over. Adjust cam lock nut (Figure 12) as needed.

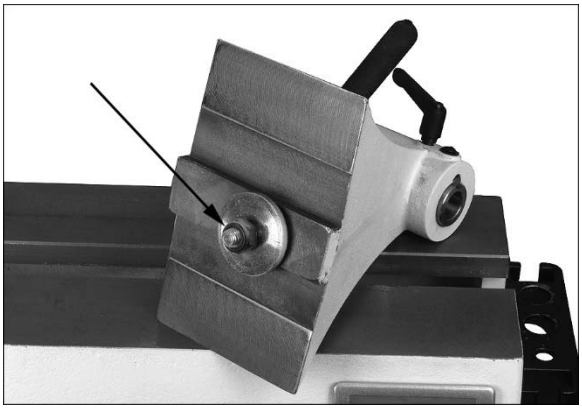

Figure 12

9.3 Speed Change

Referring to Figures 13 and 14:

The lathe has three speed ranges, controlled by a combination of the electronic variable speed dial *(see section 10.0)* and the position of the belt upon one of three pulley sets. Figure 13 identifies these ranges. This chart is also affixed to inside of pulley access door.

When there is no torque on the lathe (i.e. running without a workpiece attached), each of the lower settings has an RPM range as follows: (H) 600-220, (M) 300-110, (L) 160-60.

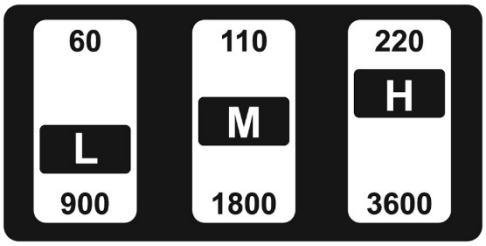

Figure 13

To move belt to a different pulley:

1. Open upper and lower pulley access doors.

2. Relieve belt tension by pulling handle (F, Figure 14) while pushing up lever (G).
3. Move belt to desired pulley set. Make sure belt is properly seated in both pulleys, and both pulleys are aligned (belt is vertical, not slanted).
4. Push lever (G) down to tighten belt, and close access doors.

⚠WARNING Keep access doors closed during operation.

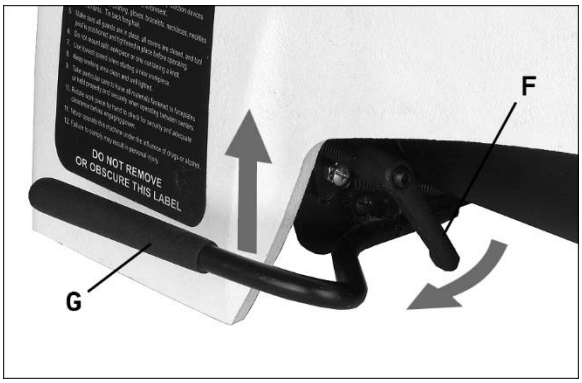

Figure 14

9.4 Index pin

Referring to Figure 15:

Indexing is used to create evenly spaced features in a work piece, while keeping the lathe spindle locked; for example, when cutting flutes on a spindle blank with a hand-held router, while the spindle blank is secured between lathe centers.

Your lathe provides 24 indexing positions. These are identified by inscribed numbers on the spindle pulley (H, Figure 15)

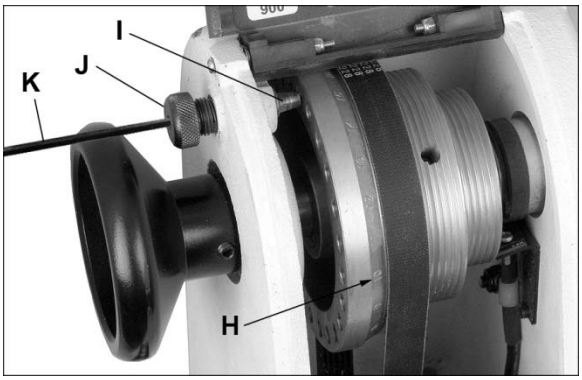

Figure 15

1. Rotate spindle until index pin (I) aligns with desired hole.
2. Push index pin into hole and rotate knurled head (J) to engage threads and secure in position.
3. Perform operation.
4. Rotate knurled head counterclockwise until pin releases. Move pulley to next desired hole, and repeat. NOTE: A 3mm hex key (K, Figure 15) can be inserted and turned in the hole of the knurled head, to help tighten or loosen the index pin.

⚠CAUTION Disengage index pin before starting lathe.

IMPORTANT: Do not use index pin to lock spindle, which will cause unnecessary wear to the pin. Use spindle lock for this purpose.

10.0 Operating controls

Referring to Figure 16:

Speed dial (A): Rotate dial to set speed, which is shown as RPM (revolutions per minute) in the adjoining digital readout window.

⚠WARNING Do not start lathe at maximum speed with a workpiece mounted. Start at lowest speed within that range and gradually increase to full speed.

Fwd/Rev switch (B): Forward is counterclockwise rotation of spindle, as viewed from tailstock end. It is the normal rotation for standard woodturning operations. Reverse is clockwise rotation. Spindle direction can be changed without turning off the lathe.

On/off switch (C): Pull up to start lathe, push down to stop. The safety key (C_1) can be removed to prevent unauthorized use of lathe. Key must be reinserted to start lathe.

If a power outage should occur during operation, the lathe will not immediately restart when power is resumed. Flip paddle switch off and then back on to start lathe.

Digital readout (D): The digital readout may display an error code if a malfunction occurs on the lathe. Also, an alarm signal may be emitted until the issue has been resolved. If an error code occurs, consult *section 15.0, Troubleshooting.*

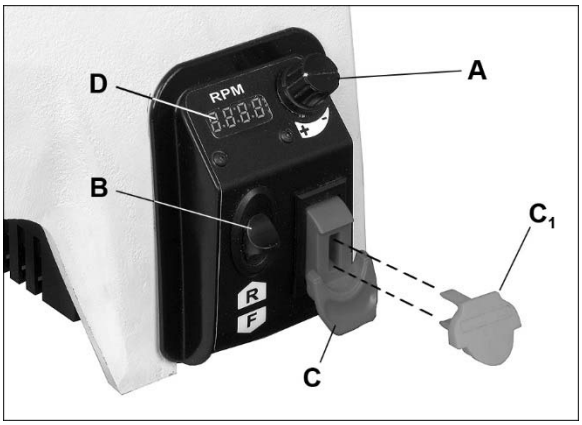

Figure 16

11.0 **Operation**

The information which follows is general in nature and is not intended to be a complete course in wood turning. Nothing can replace the knowledge gained by conversation with experienced woodturners, or consulting books or trade articles. Above all, simple trial and error will aid in developing proficiency in the craft.

11.1 **Inspection**

Before operating the lathe, check that everything is in proper working order:

1. Machine is on a level surface.
2. Check bearings; adjust only if endplay exists.
3. Check belt; it should be snug but not overly tight.
4. Bed ways; keep clean, use steel wool to remove any rust spots, and apply paste wax to prevent buildup of rust and finishes.
5. Tool support; use a mill file to remove nicks and dings.
6. Spindle tapers; should be clean and free of dust and chips for proper seating of tapers.
7. Tailstock; clean and lubricate quill and locking device.
8. Lighting; proper lighting is essential to eliminate shadows and reduce eye strain.

11.2 **Turning Tools**

If possible, select only quality, high-speed steel turning tools. High-speed steel tools hold an edge and last longer than ordinary carbon steel. As one becomes proficient in turning, a variety of specialty tools for specific applications can be acquired. The following tools provide the basics for most woodturning projects (see Figure 17):

Skews – 1-1/2" and 1" or 1-1/4", used to make finishing cuts and details.

Large Roughing Gouge – 1" to 1-1/4", used to eliminate waste wood.

Spindle Gouges – 1/4", 3/8", 1/2", used to turn beads, coves and other details.

Deep Fluted Bowl Gouge – 1/4", 3/8" and 1/2", used for turning bowls & plates.

Square Scraper (Bedan) – 3/8" or 1/2", used to create square shoulders.

Large Round Nose (Domed) Scraper – 1-1/2", used to reduce ridges on interior of bowls, round edges of bowls, etc.

Parting Tool - 1/8", used for scraping, making a cut-off, or to set diameters for sizing.

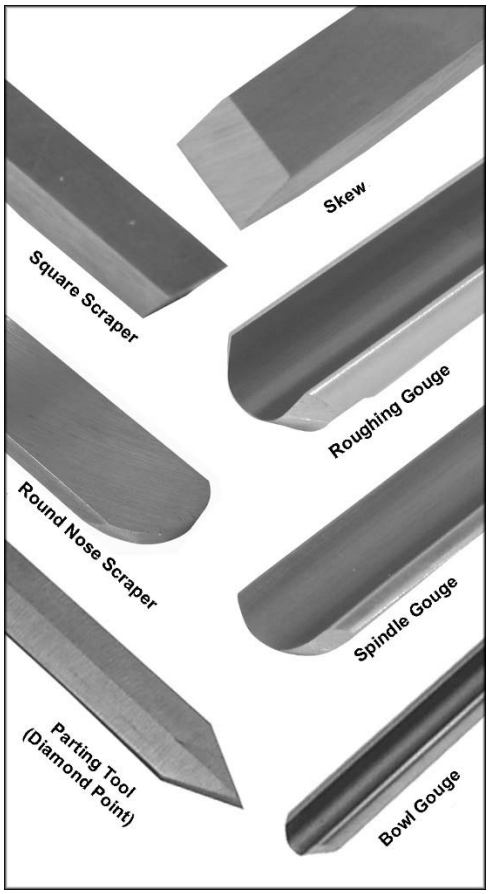

Figure 17
Basic Turning Tools

For safety and best performance, *keep tools sharp*. If a tool stops cutting or requires excessive pressure to make a cut, it needs to be sharpened. A number of brand name sharpening jigs and fixtures are available; however, a woodturner should learn to sharpen tools freehand.

For best results, use a slow speed grinder (1800 rpm) fitted with a 60-grit aluminum oxide wheel (for shaping) and a 100-grit alum. oxide wheel (for final sharpening and touchup). The grinder should be located near your lathe and at a comfortable height. A diamond dresser will keep the wheels true and eliminate glazing.

Never allow the tool to rest in one place on the wheel, keep it moving and use a light touch.

Carbon steel tools can overheat easily and should be cooled frequently. If the edge turns blue, it has lost its temper and should be ground past the blue area. High-speed steel tools are not as likely to overheat, but can be damaged if allowed to get red hot. High-speed steel tools should not be quenched for cooling. Honing with a diamond lap or slipstone will save trips to the grinder and keep the edge fresh.

11.3 Spindle Turning

Spindle turning takes place between the centers of the lathe. It requires a spur or drive center in the headstock, and a live or dead center in the tailstock. A cup center rather than a cone center in the tailstock will often reduce the risk of splitting the stock.

Figure 18 shows the basic profile shapes in spindle turning.

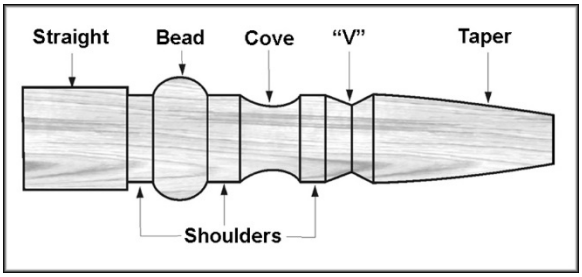

Figure 18

11.3.1 Stock Selection

Stock for spindles should be straight grained and free of checks, cracks, knots and other defects. It should be cut 1/8" to 1/4" larger than the finished diameter and may require additional length so the ends can be removed later. Larger stock should have the corners removed to produce an octagon making the piece easier to rough down to a cylinder.

1. With a combination square, or plastic center finder for round stock, locate and mark center on each end of the workpiece. Accuracy is not critical on full rounds but extremely important on stock where square sections are to remain. Put a dimple in the stock with an awl or nail, or use a spring-loaded automatic center punch.
2. Extremely hard woods may require kerfs cut into the ends of the stock (Figure 19) using a band saw, so the wood will accept the spur center and the live center.

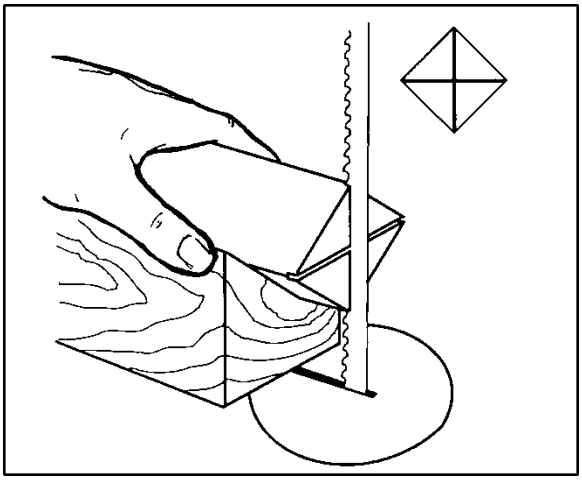

Figure 19

3. Drive the spur center about 1/4" into the workpiece, using a wood mallet or dead blow hammer as shown in Figure 20. Be careful that you do not split the workpiece. **Never use a steel face hammer and never drive the workpiece onto the spur center while it is mounted in the Lathe spindle.**

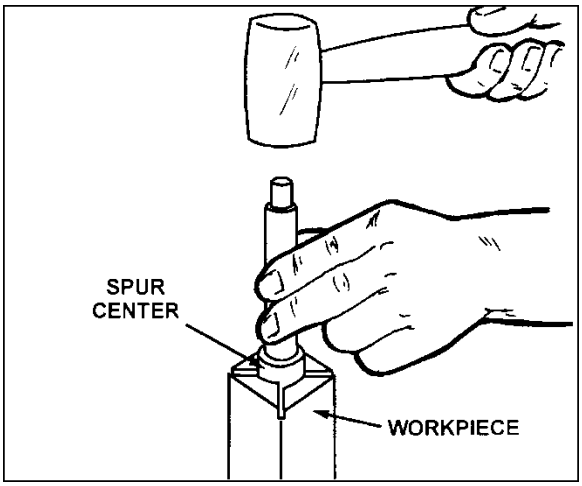

Figure 20

4. Make sure the headstock is locked to the Lathe bed.
5. Clean the tapered end of the spur center and the inside of the headstock spindle.
6. Insert the tapered end of the spur center (with the attached workpiece) into the headstock spindle.
7. Support the workpiece while bringing the tailstock into position about 1" away from the end of the workpiece. Lock the tailstock to the bed.
8. Advance the tailstock spindle with the handwheel in order to seat the live center into the workpiece. Use enough pressure to secure the workpiece between the centers so that it won't fly off, but do not use excessive pressure.
9. Tighten the spindle locking handle.

⚠CAUTION The tailstock ram is capable of exerting excessive pressure against the workpiece and the headstock. Apply only sufficient force with the tailstock to hold the workpiece securely in place. Excessive pressure can overheat center bearings and damage both workpiece and Lathe.

10. Move tool support into position. It should be parallel to the workpiece, just below the centerline and approximately 1/8" to 1/4" from the corners of the workpiece to be turned, as in Figure 21. Tighten support base to Lathe bed.

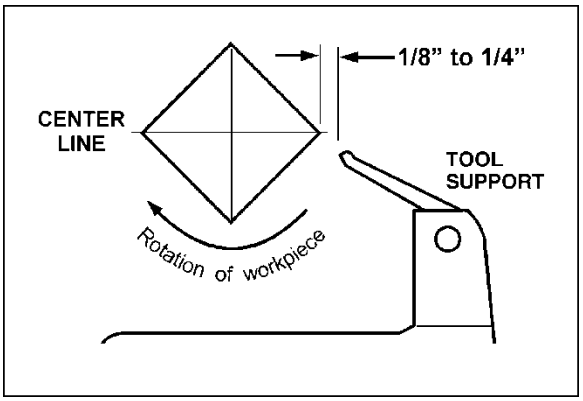

Figure 21

11. Rotate workpiece by hand to check for proper clearance.
12. Start lathe at lowest speed and bring it up to the appropriate RPM for the size of workpiece used. Consult the machine's digital readout.

11.3.2 Cutting Techniques

Roughing Out

1. Begin with a large roughing gouge. Place the tool on the tool support with the heel of the tool on the surface to be cut.
2. Slowly and gently raise tool handle until cutting edge comes into contact with the workpiece.
3. Beginning about 2" from the tailstock end of the workpiece, roll the flute (hollowed-out portion) of the tool in the direction of the cut. See Figure 22. Make long sweeping cuts in a continuous motion to rough the piece down to a cylinder.
4. Keep as much of the bevel of the tool as possible in contact with the workpiece to ensure control and avoid catches. NOTE: Always cut down-hill, or from large diameter to small diameter. Always work *toward* the end of a work-piece, never start cutting at the end.

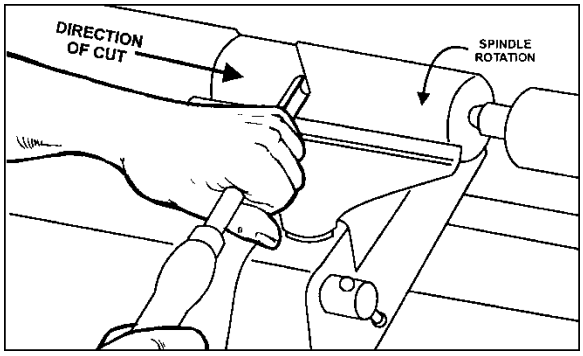

Figure 22

5. Once the workpiece is roughed down to a cylinder, smooth it with a large skew. Keep the skew handle perpendicular to the spindle and use only the center third of the cutting edge for a long smoothing cut (touching one of the points of the skew to the spinning workpiece may cause a catch and ruin the workpiece).
6. Add details to the workpiece with skew, parting tool, scraper or spindle gouge.

Beads

1. Make a parting cut for what is to be a bead to the desired depth. Place the parting tool on the tool support and move tool forward to make the full bevel of the tool come into contact with the workpiece. Gently raise handle to make cut to the appropriate depth.
2. Repeat for other side of the bead.
3. Using a small skew or spindle gouge, start in the center between the two cuts and cut down each side to form the bead. Roll the tool in direction of cut.

Coves

1. Use a spindle gouge. With the flute of the tool at 90 degrees to the workpiece, touch the point of the tool to the workpiece and roll in towards the bottom of the cove. See Figure 23. **Stop at the bottom; attempting to go up the opposite side may cause the tool to catch.**

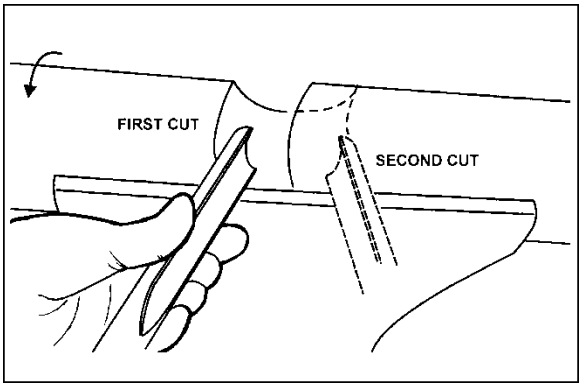

Figure 23

2. Move the tool over the desired width of the cove.
3. With the flute facing the opposite direction, repeat step 1 for other side of cove. Stop at bottom of cut.

"V" Cuts

1. Use the long point of the skew. (NOTE: Do not press the long point of the skew directly into the workpiece to create the "V"; this will result in a burned or burnished "V" with fibers being rolled up at both sides.)
2. Lightly mark the center of the "V" with the tip of the skew.
3. Move the point of the skew to the right half of the desired width of your cut.

4. With the bevel parallel to the right side of the cut, raise the handle and push the tool in to the desired depth, as shown in Figure 24.

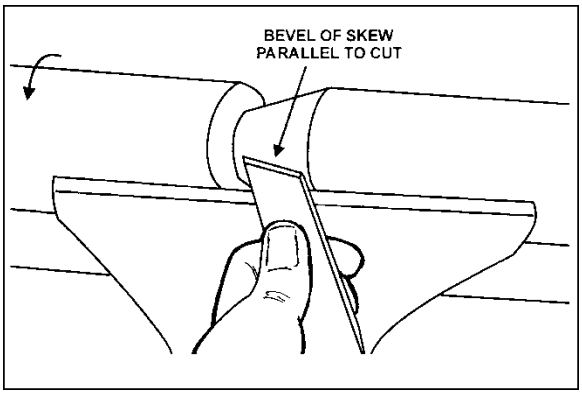

Figure 24

5. Repeat from the left side. The two cuts should meet at the bottom and leave a clean "V" cut.
6. Additional cuts may be taken to add to either the depth or width of the cut.

Parting Off

1. Use parting tool.
2. Adjust lathe speed to lower RPM for parting through a workpiece.
3. Place tool on tool support and raise the handle until it starts to cut and continue to cut toward the center of the workpiece.
4. Loosely hold on to the piece in one hand as it separates from the waste wood.

Sanding and Finishing

Leaving clean cuts will reduce the amount of sanding required. Move the tool support out of the way, adjust the lathe to a **low speed**, and begin with fine sandpaper (120 grit or finer). Coarser sandpaper will leave deep scratches that are difficult to remove, and dull crisp details on the spindle. Progress through each grit without skipping grits (for example, do not jump from 120 grit to 220 grit). Fold the sandpaper into a pad; do not wrap sandpaper around your fingers or the workpiece.To apply a finish, the workpiece can be left on the lathe.

Turn off the lathe and use a brush or paper towel to apply the finish. Remove excess finish before restarting lathe. Allow to dry and sand again with 320 or 400 grit sandpaper. Apply second coat of finish and buff.

11.4 Face Plate and Bowl Turning

Mounting Stock

Use of a face plate is the most common method for holding a block of wood for turning bowls and plates:

1. Select stock at least 1/8" to 1/4" larger than each dimension on the finished workpiece.
2. Always select the largest diameter face plate that can be used for the workpiece to be turned.
3. True one surface of the workpiece for mounting against the face plate.
4. Using the face plate as a template, mark the location of the mounting holes on the workpiece, and drill pilot holes of the appropriate size. Face plates are drilled for No. 12 screws. (Phillips and square drive screws will hold up better than slotted screws. Sheet metal screws are case hardened with deeper and sharper threads than wood screws.)

If the mounting screws on the face plate interfere with the workpiece, a glue or waste block can be used:

5. Make a block the same diameter as the face plate, Figure 25. Both waste block and workpiece should have flat surfaces for gluing.
6. Glue the block to the workpiece. Avoid using brown paper or newspaper between the waste block and workpiece. It may work fine if you are using scrapers, but a slight catch with a bowl gouge can separate the two.

NOTE: When using a waste block, be careful with the adhesive you select. Dry workpieces can be bonded with ordinary white or yellow glue but must be clamped to ensure a good bond. Green workpieces require cyanoacrylate type glue.

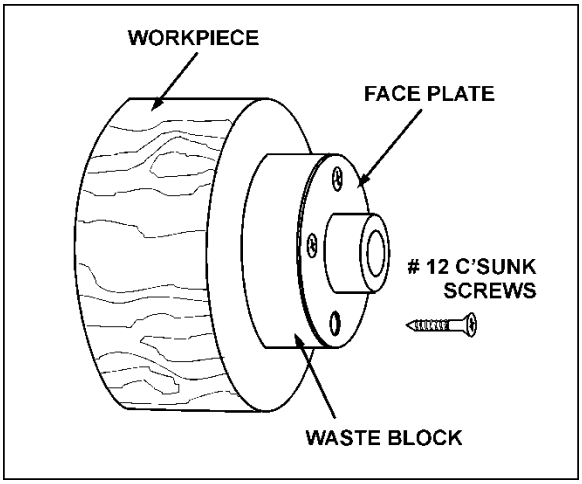

Figure 25

Faceplate or Chuck?

While faceplates are the simplest, most reliable method of holding a block of wood for turning, chucks can also be used. As there are dozens of chucks to choose from, the woodturner should first consider all the different types of turning that will be done, and read reports or discuss with other turners who own chucks before making a decision.

A chuck is not a requirement, but is handy when working on more than one piece at a time. Rather than removing screws, you simply open the chuck and change workpieces.

The most popular ones are four jaw scroll chucks with a variety of jaws to accommodate different size tenons. Most also come with a screw chuck as well.

Wood Selection

Firewood is the cheapest, most widely available stock to use while learning to turn bowls. Simply waste wood for a while practicing turning techniques. Develop skill with each tool before attempting to make a finished piece. It is best to start with dry wood, without worrying about drying or distortion. Once turning becomes comfortable, try green wood which cuts very easily. As the turner gains experience, he or she will find extraordinary grain and figure in the form of burls, crotches and bark inclusions.

Checks and Cracks

Green wood will check and crack. For best results, leave logs in as long a length as you can handle. As the material starts to dry, surface cracks will develop on the ends of the log. Cut off two to three inches and you should find good, sound wood. Also cut the log in half along the pith to avoid having it in the finished piece. Most checks radiate from the pith.

As you turn bowls from green wood, make sure you maintain a consistent wall thickness throughout the piece. Leaving a piece thick in some areas and thin in others will cause the wood to dry unevenly and promote checks and cracks.

Distortion

Distortion is a problem associated with turning green wood. It will vary from one type of wood to the next. Typically, fruitwoods tend to distort more than others. It also varies with the time of year the tree was cut and how the logs are stored.

Tools for Bowl Turning

The deep fluted bowl gouge is the most essential and versatile tool for most bowl and plate turning. The bowl gouge is heavier and easier to control than other types of gouges. It also allows removal of wood much faster and with less vibration than other gouges. Most average sized bowl work can be accomplished with a 3/8" or 1/2" bowl gouge. A 1/4" bowl gouge is best suited for smaller bowls and light finishing cuts. Larger 3/4" and 1" bowl gouges are only used for extremely large pieces.

Large domed scrapers can also be used to help clean up the interior surfaces of bowls. A light touch with the scraper slightly tilted will eliminate some of the ridges occasionally left by an inexperienced bowl gouge.

11.5 Bowl Turning Techniques

To Shape Outside of Bowl

1. Odd shaped burls, crotches and other irregular shaped blanks require special preparation before mounting in a chuck or onto a faceplate. Remove the bark, if there is any, from what appears to be the center of the top of the workpiece.
2. Drive spur center into the top of the workpiece with a mallet or dead blow hammer.
3. Slip the spur center into the headstock taper and bring the tailstock with a live or ball bearing center into position. Lock the tailstock to the bed and advance the tailstock spindle in order to seat the cup center into the workpiece. Tighten the ram locking handle.
4. Turn workpiece by hand to ensure proper clearance.
5. Start lathe at lowest speed and bring it up to the maximum safe speed for the size of work to be turned. If the machine starts to vibrate, lower the speed until vibration stops.
6. Rough out the outside of the bowl with the 1/2" deep fluted bowl gouge, holding the handle of the tool firmly against your hip. For best control, use your whole body to move the gouge through the workpiece.
7. As the bowl takes shape, work on the bottom (tailstock end) to accomodate attaching a face plate.
8. Turn a short tenon (about 1/8" long) the size of the hole in the faceplate. See Figure 26. This will allow centering the workpiece when the faceplate is attached.

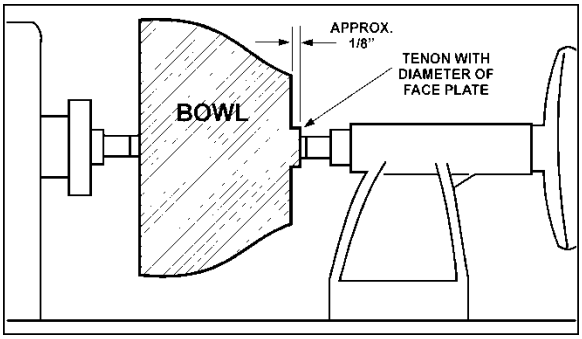

Figure 26

(NOTE: If you plan to use a chuck, turn a tenon of the appropriate length and diameter to fit your chuck.)

9. Stop the lathe, remove workpiece and attach face plate or chuck (see *Section 11.4*, *"Mounting Stock"*).

⚠WARNING The surfaces of faceplate and workpiece should mount flush to each other.

10. Finish turning the outside of bowl with 1/2" or 3/8" bowl gouge. Leave additional material at base of bowl for support while turning interior. This will be removed later.

To Shape Interior of Bowl

1. Stop the lathe and move tailstock away. (You may want to remove the center from the tailstock to avoid bumping it with your elbow.)
2. Adjust tool support in front of the bowl just below centerline, at a right angle to the lathe ways.
3. Rotate workpiece by hand to check clearance.
4. Face off top of bowl by making a light shearing cut across the top of workpiece, from rim to center.
5. Place 1/2" bowl gouge on tool support at center of the workpiece with the flute facing top of bowl. The tool handle should be level and pointed toward the four o'clock position, as shown in Figure 27.

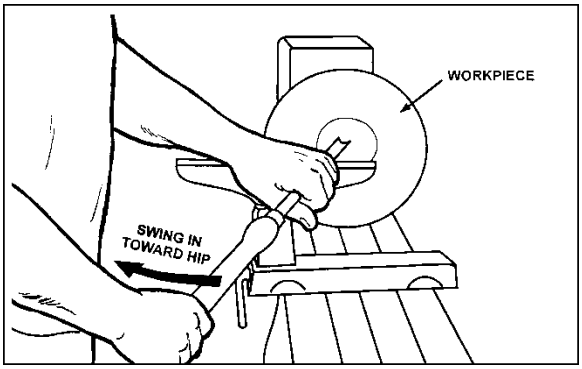

Figure 27

6. Use the left hand to control cutting edge of gouge, while right hand swings tool handle around toward your body (Figure 27). The flute should start out facing top of workpiece, and rotate upward as it moves deeper into the bowl to maintain a clean even curve. As the tool goes deeper into the bowl, progressively work out toward the rim. It may be necessary to turn the tool support into the piece as you get deeper into the bowl.

   (NOTE: Try to make one, very light continuous movement from the rim to the bottom of the bowl to ensure a clean, sweeping curve through the piece. Should there be a few small ridges left, a light cut with a large domed scraper can even out the surface.)

7. Develop wall thickness at the rim and maintain it as you work deeper into the bowl (Once the piece is thin toward the bottom, you cannot make it thinner at the rim). When the interior is finished, move the tool support to exterior to re-define bottom of bowl. (General rule of thumb: the base should be approximately 1/3 the overall diameter of the bowl).
8. Work the tight area around faceplate or chuck with 1/4" bowl gouge.
9. Begin the separation with a parting tool, but do not cut all the way through yet.

Sanding and Finishing

1. Remove the tool support and adjust lathe speed to approximately 500 RPM. High speed can build friction while sanding and cause heat check in some woods.
2. Begin with fine sandpaper (120 grit) and progress through each grit, using only light pressure. Coarser sandpaper tends to leave deep scratches that are hard to eliminate. Use power-sanding techniques to avoid concentric sanding marks around your finished piece. Avoid rounding over the rim and foot with sandpaper; try to keep details crisp. Finish sanding with 220 grit.
3. Remove sanding dust with tack rags or compressed air and, with lathe turned off, apply first coat of finish. Let stand for several minutes, wipe off excess. Allow to dry before sanding again with 320 or 400 grit sandpaper.
4. Turn lathe back on and continue the separation cut almost all the way through the base. Stop at about 3" and use a small fine tooth saw to separate the bowl from the waste.
5. Apply second finish coat and allow to dry before buffing.

12.0 Maintenance

12.1 General maintenance

Periodically inspect lathe for loose fasteners, worn electrical cables, proper belt tension, belt wear, or any other situation that might affect operation or create a safety risk.

Wipe down the lathe after each use, and blow out chips and dust using compressed air (***wear eye and respiratory protection!***).

Periodically apply a light coat of oil to headstock spindle, tailstock quill, bed surface, and tool rest post. Protect the bed from rust by applying paste wax or a commercially available rust protectant.

Bearings are permanently lubricated and sealed. They do not require further lubrication.

12.2 Motor Brushes

Referring to Figure 28:

Periodically inspect the two carbon brushes located at each side of the motor. If brushes need replacing, replace both at the same time.

⚠CAUTION A heavily worn or damaged brush, if allowed to remain, may eventually cause damage to internal motor elements.

1. Disconnect lathe from power.
2. Unscrew cap (A, Figure 28) using a screwdriver or coin, and withdraw brush.
3. Inspect brush. Replace brush if any of the following are seen: Brush is worn 1/4" (6mm) or more, collapsed spring, broken lead in spring, abnormal discoloration, signs of breakage, burning or crumbling.
4. Reinsert brush, or install new one, and screw in cap.
5. Repeat inspection for brush on opposite side of motor.

Figure 28

12.3 Belt replacement

Referring to Figures 29 through 32:

1. Disconnect lathe from power.
2. Release belt tension (see Figure 14), and open pulley access doors.
3. Remove spur center and faceplate.
4. Engage spindle lock, and loosen both set screws (A) in handwheel with 3mm hex key. Unscrew handwheel from spindle. (Note: Left-hand threads; turn clockwise to remove.)
5. Disengage spindle lock.
6. Loosen both setscrews (B) in spindle pulley.
7. Loosen setscrew in spindle sensor collar (C).

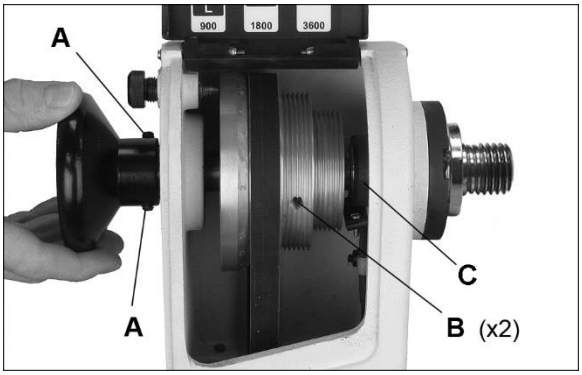

Figure 29

8. Remove three button head screws to loosen cover (D, Figure 30). NOTE: When cover is loosened, the spindle lock assembly (E) may pop out with its spring. Be careful not to lose these parts.

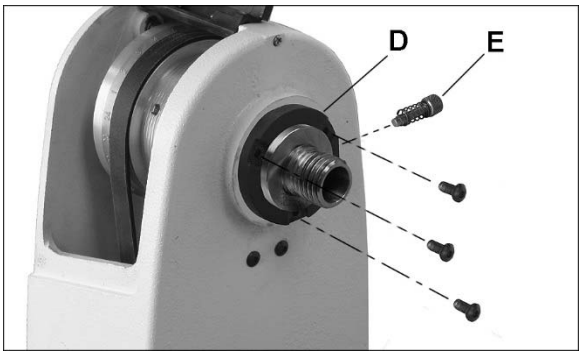

Figure 30

9. Use a rubber mallet, or hammer against a block of wood, to tap spindle toward tailstock (Figure 31). Note: The right side bearing will slide out with the spindle.

⚠CAUTION Never use a steel face hammer directly against the spindle.

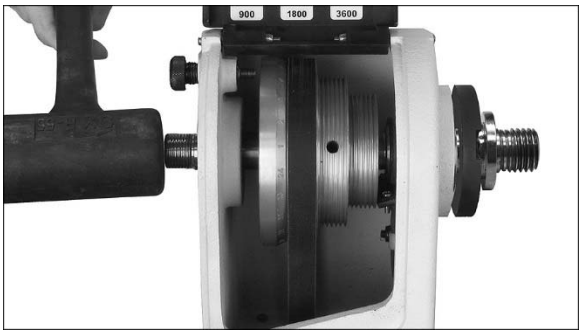

Figure 31

10. Continue pulling spindle toward tailstock until it clears left hole in headstock and offers enough room to remove belt (Figure 32).

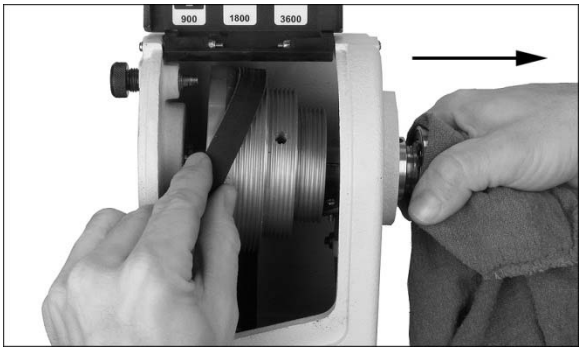

Figure 32

11. Remove belt through lower access door.
12. Reverse above procedure to install belt and re-position spindle.

    NOTE: Make sure:

    - to place cover (D, Figure 30) onto spindle *before* inserting spindle into headstock.
    - to insert spindle lock with its spring (E, Figure 30) before tightening cover.
    - that right-side bearing is properly seated in its recess in the headstock.
    - that spindle sensor collar (C, Figure 29) is positioned over the sensor before tightening setscrew.
    - that spindle pulley is aligned with motor pulley.
    - not to overtighten handwheel when re-installing.

13.0 **Recommended Lathe Speeds** (per diameter of workpiece)

Diameter of Work	Roughing RPM	General Cutting RPM	Finishing RPM
Under 2”	1520	3000	3000
2” to 4”	760	1600	2250
4” to 6”	510	1080	1500
6” to 8”	380	810	1125
8” to 10”	300	650	900
10” to 12”	255	540	750

Table 2

14.0 **Optional accessories**

These accessory items, purchased separately, can enhance the functionality of your lathe. Contact your dealer to order, or call JET at the phone number on the cover.

719201 – Bed Extension (22-1/2”) for JWL-1221VS Lathe

719202A– Stand for JWL-1221VS Lathe

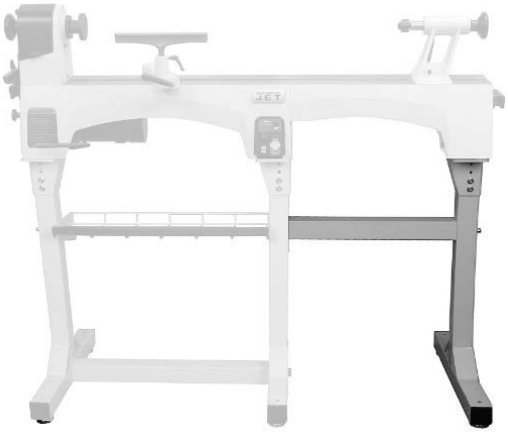

719203A – Stand Extension for JWL-1221VS Lathe

15.0 **Troubleshooting the JWL-1221VS Lathe**

Table 3

Trouble	**Probable Cause**	**Remedy**
Motor fails to develop full power	Power line overloaded	Correct overload condition
	Undersize wires in power supply system.	Increase supply wire size.
	Worn motor	Replace motor
Motor or spindle stalls or will not start	Excessive cut	Reduce depth of cut
	Improper belt adjustment, or worn or broken belt	Adjust or replace belt as needed
	Motor brushes are worn or damaged	Replace brushes
	Worn spindle bearings	Replace bearings
	Worn motor	Replace motor
Excessive vibration	Workpiece warped, out of round, has major flaw, or was improperly prepared for turning	Correct problem by planing or sawing workpiece, or discard entirely and use new workpiece
	Worn spindle bearings	Replace spindle bearings
	Worn drive belt	Replace drive belt
	Motor mounting fasteners are loose	Tighten fasteners
	Lathe on uneven surface	Place lathe on flat surface
Tools tend to grab or dig in	Dull tools	Keep tools sharp
	Tool support set too low	Reposition tool support height
	Tool support set too far from work piece	Reposition tool support closer to work piece
	Improper tool being used	Use correct tool for operation
Tailstock moves when applying pressure	Cam lock nut needs adjusting	Tighten cam lock nut
	Lathe bed and tailstock mating surfaces are greasy or oily	Remove tailstock and clean surfaces with a cleaner/degreaser. Re-apply light coat of oil to lathe bed surface.
RPM shown on digital readout is incorrect (lower than speed chart)	Voltage too low (95 or under)	Request voltage check from power company
E1 shown on digital readout	Overheating in heat sink	Reduce depth of cut
E3 shown on digital readout	Voltage too high	Request voltage check from power company
E4 shown on digital readout	Overload limiter in circuit board activated	Reduce depth of cut
E6 shown on digital readout	Spindle sensor not working	Check connectors of spindle sensor cord to switch box
		Readjust sensor closer to sensor collar
		Replace sensor collar (p/n JWL1221VS-110)
		Replace sensor set (p/n JWL1221VS-112)

Trouble	Probable Cause	Remedy
E7 shown on digital readout	Motor sensor not working	Check connectors of motor sensor cord to switch box
		Readjust sensor closer to sensor collar
		Replace sensor collar (p/n JWL1221VS-254)
		Replace sensor set (p/n JWL1221VS-258)
	Spindle locked	Release index pin or spindle lock
E8 shown on digital readout	Motor cord unplugged	Make sure connector plug of motor cord is connected
	Circuit board burned out	Replace circuit board

16.0 **Replacement Parts**

Replacement parts are listed on the following pages. To order parts or reach our service department, call 1-800-274-6848 Monday through Friday, 8:00 a.m. to 5:00 p.m. CST. Having the Model Number and Serial Number of your machine available when you call will allow us to serve you quickly and accurately.

Non-proprietary parts, such as fasteners, can be found at local hardware stores, or may be ordered from JET. Some parts are shown for reference only, and may not be available individually.

16.1.1 **Bed Assembly – Exploded View**

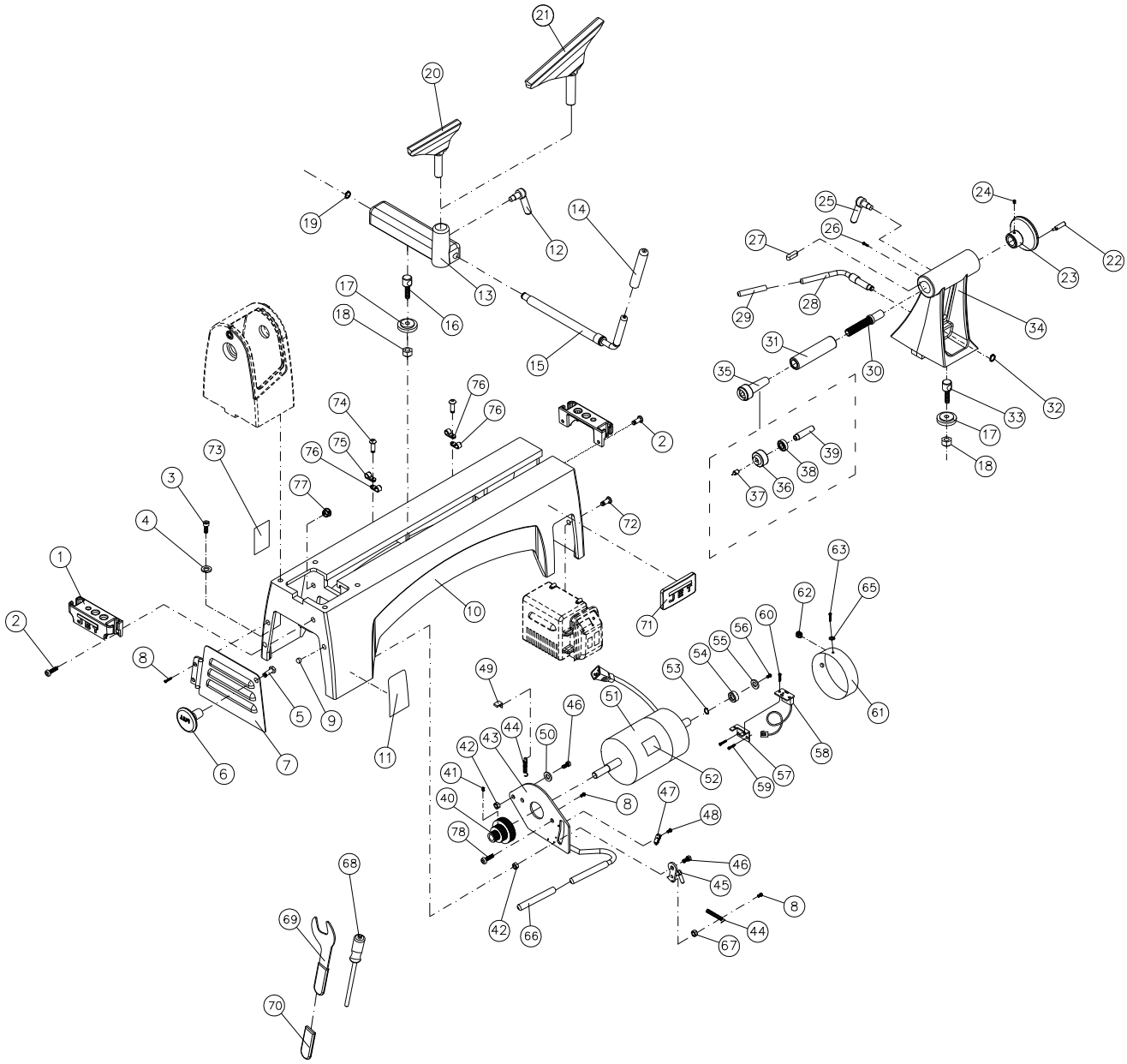

16.1.2 **Bed Assembly – Parts List**

Index No	Part No	Description	Size	Qty
1	JWL1221VS-201	Tool Caddy		2
2	TS-0255021	Socket Head Button Screw	5/16”-18x1/2”	4
3	TS-0207071	Socket Head Cap Screw	1/4”-20x1-1/4”	4
4	TS-0720071	Lock Washer	1/4”	4
5	TS-1490021	Hex Cap Screw	M8x16	1
6	6295717	Knob		1
7	JWL1221VS-207	Motor Pulley Access Door		1
8	TS-081C022	Pan Head Screw	#10-24X3/8”	3
9	JWL1221VS-209	Magnet		1
10	JWL1221VS-210	Bed		1
11	JWL1221VS-211	Warning Label		1
	JWL1221VS-TBA	Toolrest Base Assembly (*includes #12 thru #19)*		1
12	JML-59A	Lock Handle Assembly	5/16”-18x5/8”	1
13	JWL1221VS-213	Toolrest Base		1
14	JWL1221VS-214	Rubber Cover		1
15	JWL1221VS-215	Eccentric Rod		1
16	JWL1221VS-216	Toolrest Clamp Bolt		1
17	JML-44	Clamp		2
18	JML-81	Hex Nut		2
19	JML-49	C-Ring	STW-12	1
20	JWL1220-142	Toolrest	6”	1
21	JWL1220-142A	Toolrest	10”	1
	JWL1221VS-TA	Tailstock Assembly (*includes # 17, 18, 22 thru #34)*		1
	JWL1221VS-THA	Tailstock Handwheel Assembly (*includes #22 thru #24)*		1
22	JWL1221VS-222	Handle		1
23	JWL1221VS-223	Handwheel		1
24	TS-0267021	Set Screw	1/4”-20x1/4”	2
25	JML-45A	Lock Handle Assembly, Tailstock	5/16”-18x3/4"	1
26	JWL1221VS-115	Socket Head Button Screw	#10-32x5/8”	1
27	JWL1221VS-227	Key		1
28	JML-58	Eccentric Rod, Tailstock		1
29	JWL1221VS-229	Rubber Cover		1
30	JWL1221VS-230	Lead Screw		1
31	JWL1221VS-231	Quill		1
32	JML-63	C-Ring	STW-10	1
33	JWL1221VS-233	Tailstock Clamp Bolt		1
34	JWL1221VS-234	Tailstock		1
35	708331	Live Center Assembly (*includes #36 thru #39)*		1
36	JML-52	Live Center Head		1
37	JML-52A	Center Point for Live Center		1
38	BB-6002ZZ	Ball Bearing	6002ZZ	1
39	JML-54	Live Center Shaft		1
40	JWL1221VS-240	Motor Pulley		1
41	6295796	Nylon Insert Socket Set Screw	1/4”-20x3/8”	2
42	TS-0640081	Nylon Nut	5/16”-18	2
43	JWL1221VS-243	Motor Plate		1
44	JWL1221VS-244	Spring		2
45	JWL1221VS-245	Ratchet Key		1
46	TS-0051061	Hex Cap Screw	5/16”-18x1-1/4”	2
47	JWL1221VS-247	Rack		1
48	TS-081C011	Pan Head Screw	#10-24x1/4”	2
49	JWL1221VS-249	Hook		1
50	TS-0680031	Flat Washer	5/16”	1
	JWL1221VS-MASS	Motor Assembly with Sensor set (*includes #51 thru #65)*		1
51	JWL1221VS-251	DC Motor (includes #51 & #52)		1
52	JWL1221VS-252	Motor Label		1
53	JWL1221VS-253	C-Ring	STW-17	1
54	JWL1221VS-254	Special Magnet Collar		1
55	JWL1221VS-255	Washer		1
56	TS-1533032	Pan Head Screw	M5-0.8Px10	1

Index No	Part No	Description	Size	Qty
57	JWL1221VS-257	Bracket		1
58	JWL1221VS-258	Sensor, Motor		1
59	TS-1533042	Pan Head Screw	M5-0.8Px12	2
60	TS-2283102	Pan Head Screw	M3-0.5Px10	2
61	JWL1221VS-261	Motor Cover		1
62	JWL1221VS-262	Strain Relief		1
63	TS-2284082	Pan Head Screw	M4x8	3
64	JWL1221VS-264	Motor Carbon Brush with Cap (not shown)		2
65	TS-0733031	External Tooth Lock Washer	#10	2
66	JWL1221VS-266	Rubber Cover		1
67	TS-0560071	Hex Nut	#10-24	1
68	JWL1221VS-268	Knockout Rod		1
69	JWL1221VS-269	Wrench (includes #70)		1
70	JWL1221VS-270	Rubber Cover		1
71	JET-92	JET Logo with 3M Adhesive	92x38mm	1
72	TS-081C072	Pan Head Screw	#10-24x1-14”	2
73	JWL1221VS-273	ID Label		1
74	TS-0253031	Socket Head Button Screw	#10-24x1/2”	2
75	JWL1221VS-275	Clamp	3/8”	1
76	JWL1221VS-276	Clamp	1/2”	3
77	JWL1221VS-277	Cord Snap Ring		1
78	TS-0254021	Socket Head Button Screw	1/4-20 x 1/2”	2

16.2.1 **Headstock Assembly – Exploded View**

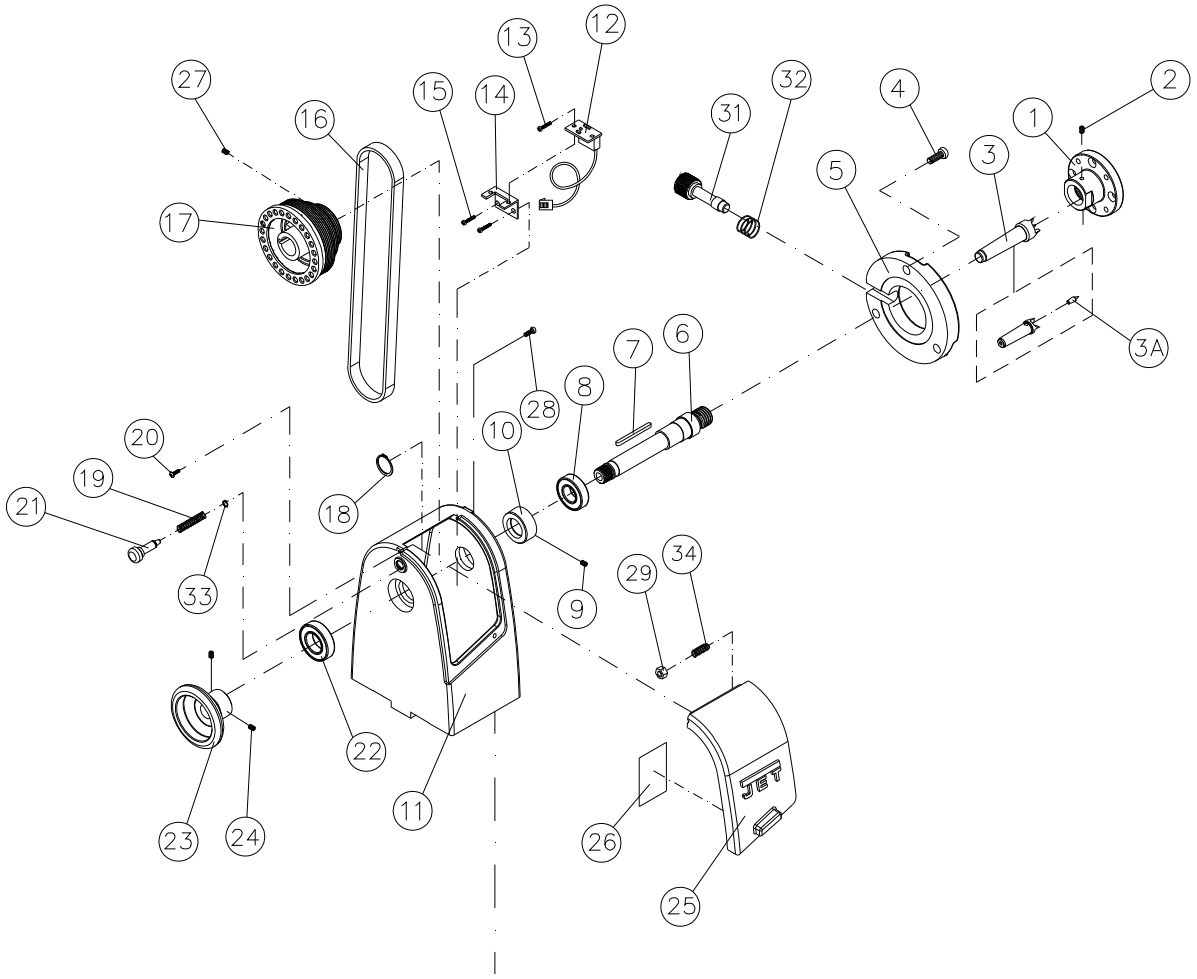

16.2.2 **Headstock Assembly – Parts List**

Index No	Part No	Description	Size	Qty
	JWL1221VS-HA	Headstock Assembly (*includes #4 thru #34)*		1
1	JWL1221VS-101	Faceplate	3”	1
2	JWL1221VS-102	Nylon Insert Socket Set Screw	1/4-20x1/4”	2
3	JML-3	Spur Center	MT2	1
3A	JML-3A	Center Point for Spur Center		1
4	TS-0253031	Socket Head Button Screw	#10-24X1/2”	3
5	JWL1221VS-105A	Cover *(serial #1302315 and higher)*		1
6	JWL1221VS-106A	Spindle	1”-8TPI	1
7	JML-5	Key	5x5x25mm	1
8	BB-6005VV	Ball Bearing	6005VV	1
9	TS-1521021	Set Screw	M4*0.7Px6	1
10	JWL1221VS-110	Spindle Sensor Collar		1
11	JWL1221VS-111	Headstock		1
12	JWL1221VS-112	Sensor, Headstock		1
13	TS-2283102	Pan Head Screw	M3x0.5Px10	2
14	JWL1221VS-114	Bracket		1
15	JWL1221VS-115	Socket Head Button Screw	#10-32x5/8”	2
16	JWL1221VS-116	V-Belt	310J	1
17	JWL1221VS-117	Spindle Pulley		1
18	6295710	C-ring	S-25	1
19	JML1014-188	Spring		1
20	JWL1221VS-120	Pan Head Screw	M3x35	1
21	JML1014-189	Index Pin		1
22	BB-6004VV	Ball Bearing	6004VV	1
23	JWL1221VS-123	Handwheel		1
24	TS-0267021	Set Screw	1/4”-20x1/4”	2
25	JWL1221VS-125	Pulley Access Door		1
26	JWL1221VS-126	Speed Label		1
27	TS-0267041	Set Screw	1/4”-20x3/8”	2
28	JWL1221VS-128	Pan Head Screw	M3x50	1
29	4224B-179	Nylon Nut	M3	2
31	JWL1221VS-131A	Spindle Lock Pin *(serial #1302315 and higher)*		1
32	JWL1221VS-132	Spring		1
33	JML1014-187	C-Ring	STW-9	1
34	JWL1221VS-134	Spring		1

16.3.1 **Controller Assembly – Exploded View**

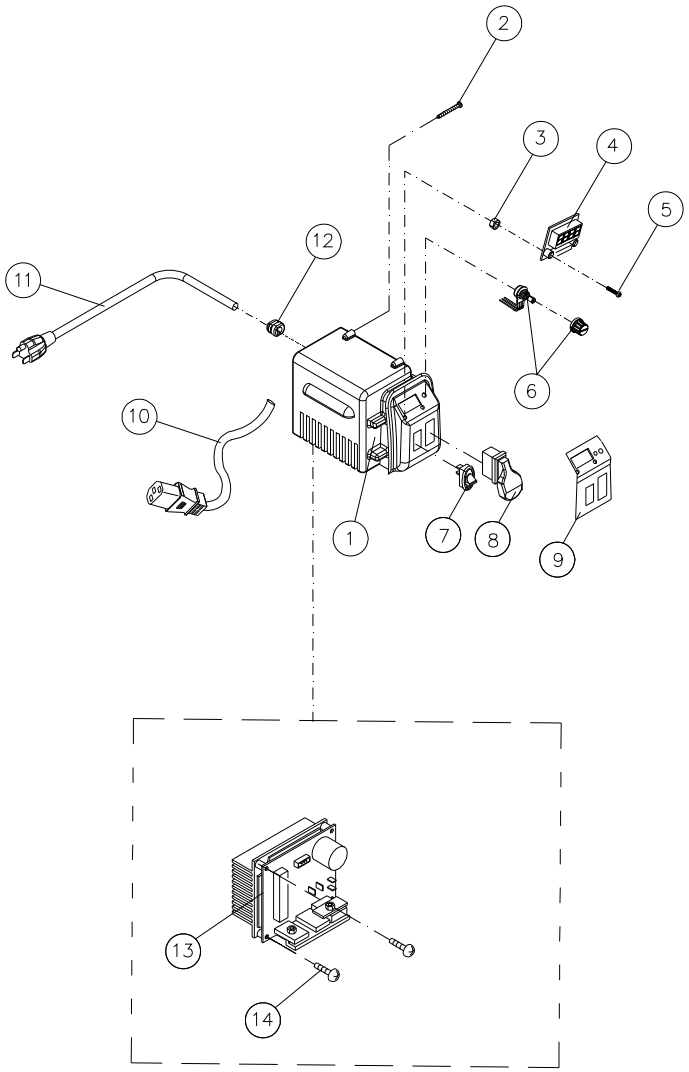

16.3.2 **Controller Assembly – Parts List**

Index No	Part No	Description	Size	Qty
	JWL1221VS-CA	Controller Assembly (*includes #1 thru #15)*		1
1	JWL1221VS-301	Switch Box		1
2	JWL1221VS-302	Tapping Screw	M3x19	4
3	TS-1540011	Hex Nut	M3	2
4	JWL1221VS-304	Digital Readout		1
5	JWL1221VS-305	Pan Head Screw	M3x20	2
6	JWL1221VS-306	Control Potentiometer Assembly		1
7	4224B-148	Switch Fwd / Rev		1
8	JWL1221VS-308	Main Switch		1
9	JWL1221VS-309	Control Panel Label		1
10	JWL1221VS-310	Motor Cord, Female		1
11	JWL1221VS-311	Power Cord		1
12	JWL1221VS-320	Strain Relief	6B-32	2
13	JWL1221VS-317A	Circuit Board Assembly *(serial # 1304627 and higher)*		1
14	JWL1221VS-321	Tapping Screw		4
15	JWL1221VS-324	Connection Cord (Power cord to PC Board)*(not shown)*		1

17.0 **Electrical Connections**

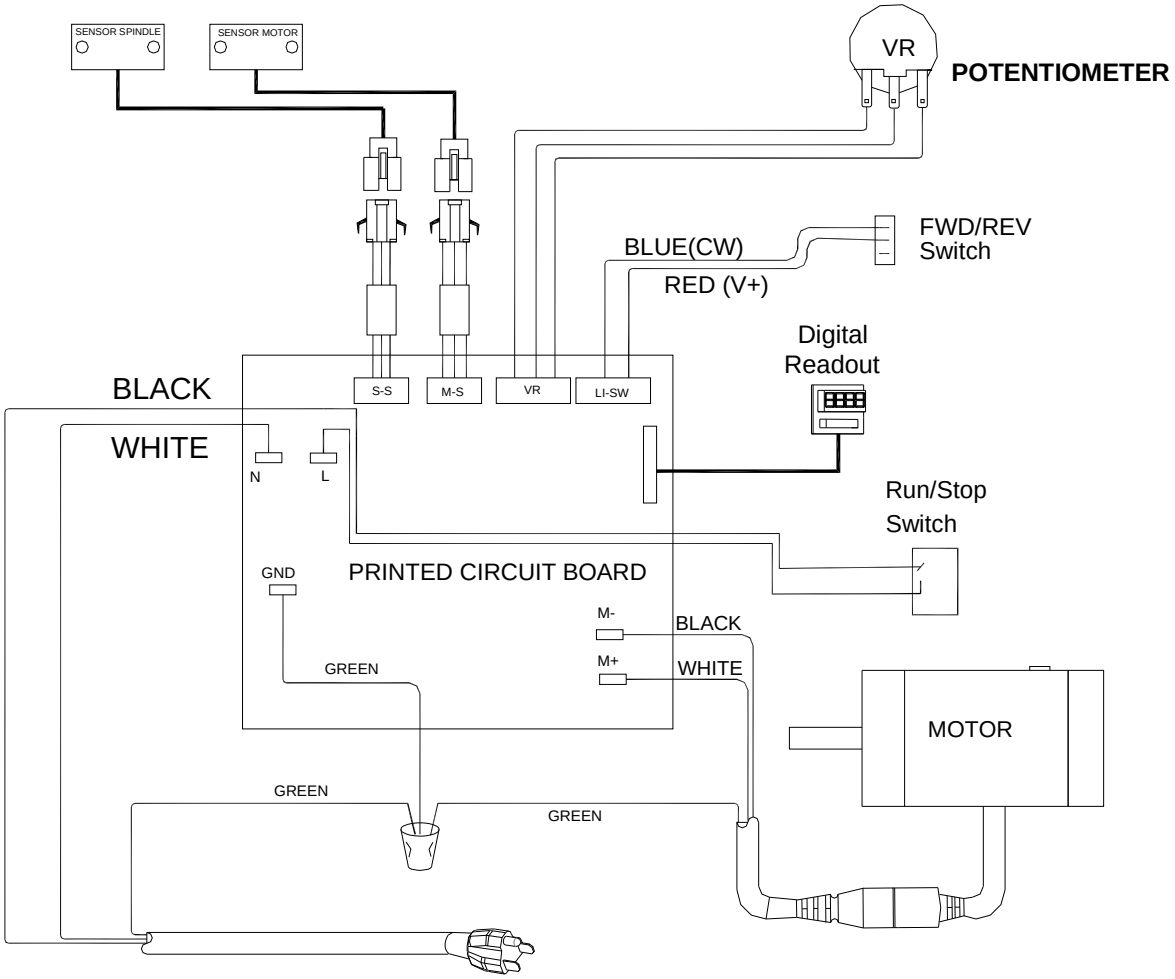

427 New Sanford Road
LaVergne, Tennessee 37086
Phone: 800-274-6848
www.jettools.com

ОФИЦИАЛЬНЫЙ ДИЛЕР В УКРАИНЕ:
storgom.ua

ГРАФИК РАБОТЫ:
Пн. – Пт.: с 8:30 по 18:30
Сб.: с 09:00 по 16:00
Вс.: с 10:00 по 16:00

КОНТАКТЫ:
+38 (044) 360-46-77
+38 (066) 77-395-77
+38 (097) 77-236-77
+38 (093) 360-46-77

Детальное описание товара: https://storgom.ua/product/tokarnyi-stanok-jet-jwl-12-1vs.html
Другие товары: https://storgom.ua/tokarnye-stanki.html