EN

BLACK+ DECKER™

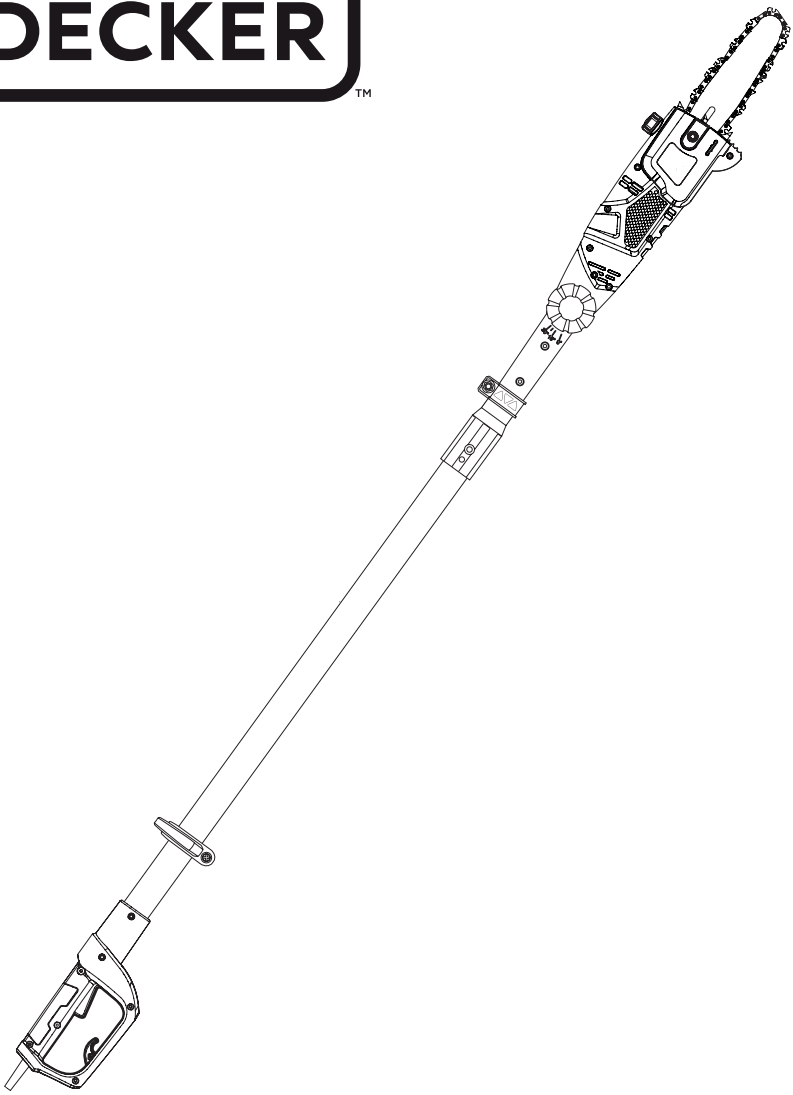

www.blackanddecker.co.uk

PS7525

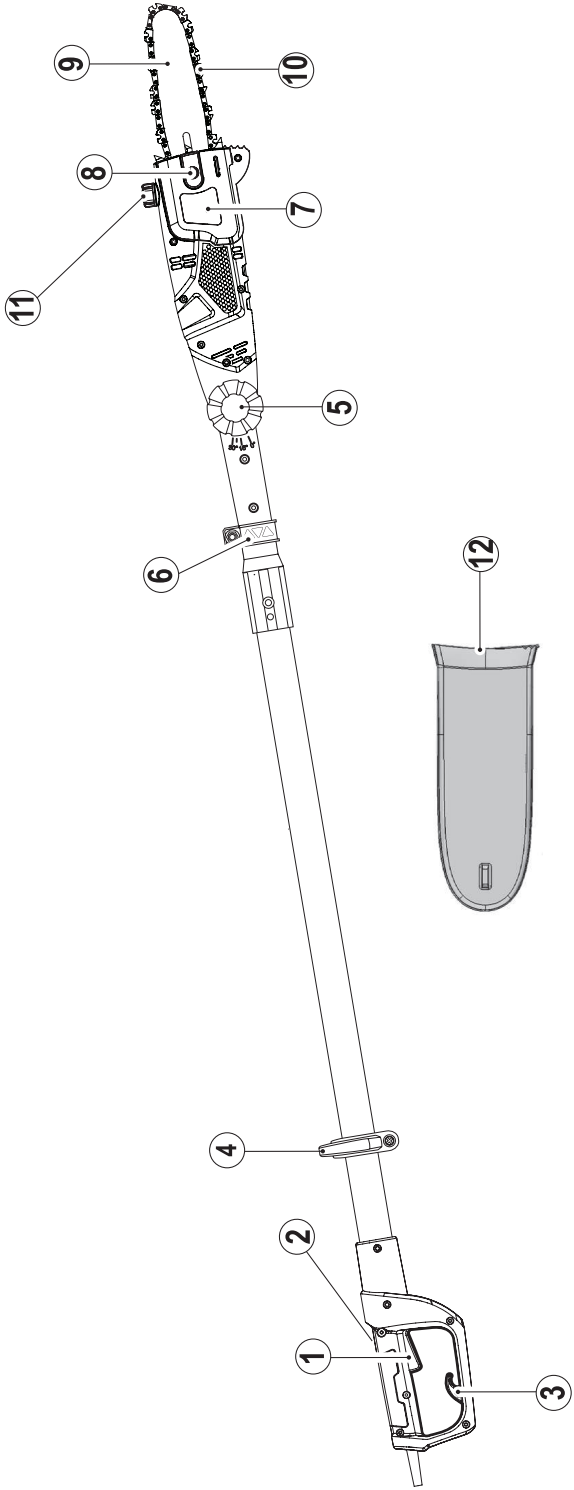
9
10
8
7
11
5
6
12
4
2
1
3

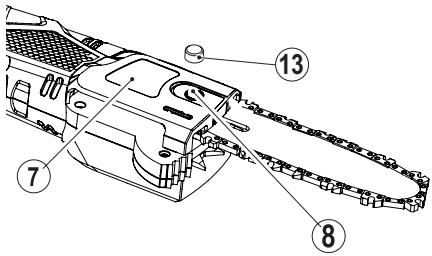

A

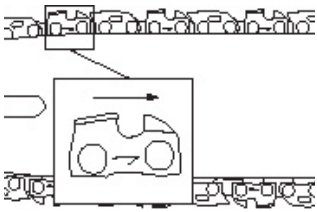

B

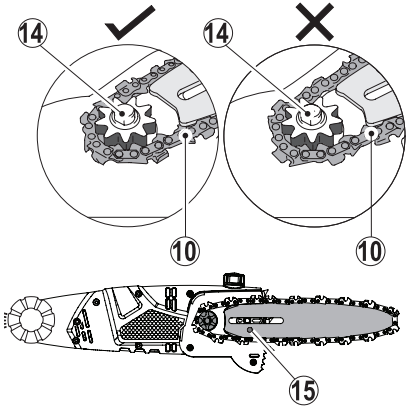

C

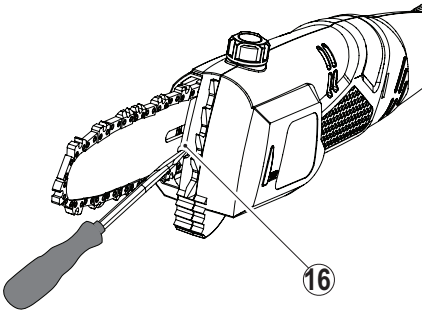

D

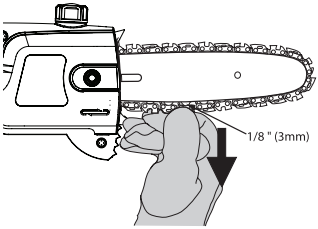

E

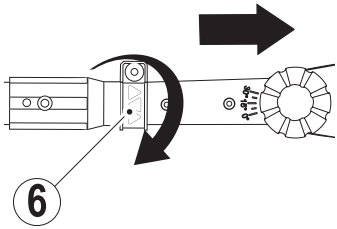

F

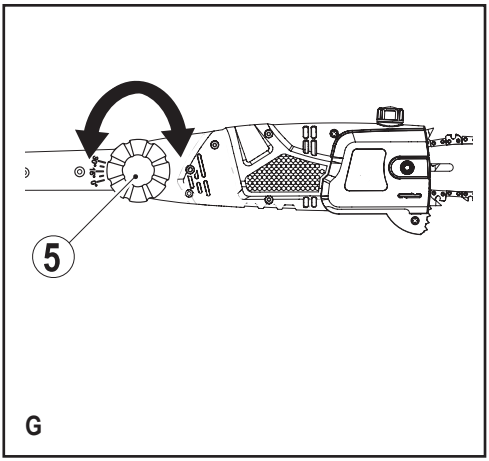
5
G

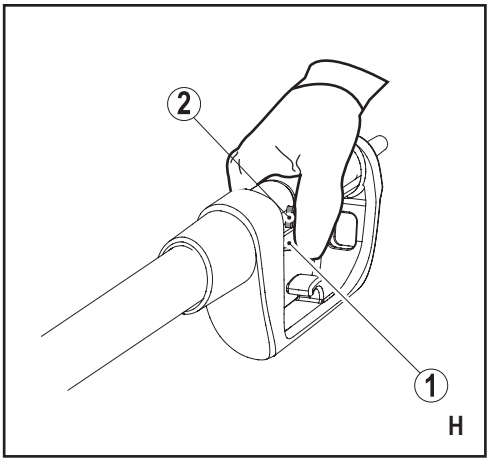
2
1
H

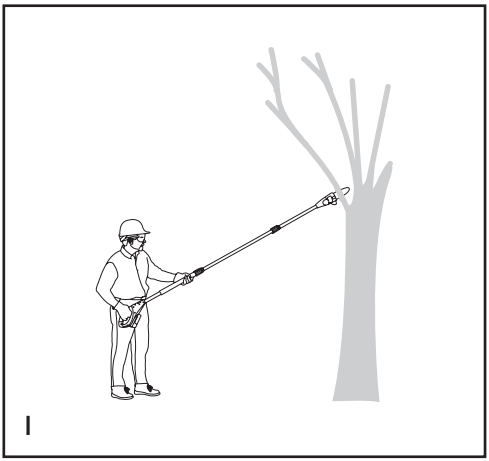
I

Intended use

Your BLACK+DECKER pole pruner has been designed for pruning trees. This tool is intended for consumer use only.

Safety instructions

General power tool safety warnings

Warning! Read all safety warnings and all instructions. Failure to follow the warnings and instructions listed below may result in electric shock, fire and/or serious injury.

Save all warnings and instructions for future reference. The term "power tool" in the warnings refers to your mains operated (corded) power tool or battery operated (cordless) power tool.

1. **Work area safety**

a. **Keep work area clean and well lit.** Cluttered or dark areas invite accidents.

b. **Do not operate power tools in explosive atmospheres, such as in the presence of flammable liquids, gases or dust.** Power tools create sparks which may ignite the dust or fumes.

c. **Keep children and bystanders away while operating a power tool.** Distractions can cause you to lose control.

2. **Electrical safety**

a. **Power tool plugs must match the outlet. Never modify the plug in any way. Do not use any adapter plugs with earthed (grounded) power tools.** Unmodified plugs and matching outlets will reduce risk of electric shock.

b. **Avoid body contact with earthed or grounded surfaces such as pipes, radiators, ranges and refrigerators.** There is an increased risk of electric shock if your body is earthed or grounded.

c. **Do not expose power tools to rain or wet conditions.** Water entering a power tool will increase the risk of electric shock.

d. **Do not abuse the cord. Never use the cord for carrying, pulling or unplugging the power tool. Keep cord away from heat, oil, sharp edges or moving parts.** Damaged or entangled cords increase the risk of electric shock.

e. **When operating a power tool outdoors, use an extension cord suitable for outdoor use.** Use of a cord suitable for outdoor use reduces the risk of electric shock.

f. **If operating a power tool in a damp location is unavoidable, use a residual current device (RCD) protected supply.** Use of an RCD reduces the risk of electric shock.

3. **Personal safety**

a. **Stay alert, watch what you are doing and use common sense when operating a power tool. Do not use a power tool while you are tired or under the influence of drugs, alcohol or medication.** A moment of inattention while operating power tools may result in serious personal injury.

b. **Use personal protective equipment. Always wear eye protection.** Protective equipment such as dust mask, non-skid safety shoes, hard hat, or hearing protection used for appropriate conditions will reduce personal injuries.

c. **Prevent unintentional starting. Ensure the switch is in the off-position before connecting to power source and/or battery pack, picking up or carrying the tool.** Carrying power tools with your finger on the switch or energising power tools that have the switch on invites accidents.

d. **Remove any adjusting key or wrench before turning the power tool on.** A wrench or a key left attached to a rotating part of the power tool may result in personal injury.

e. **Do not overreach. Keep proper footing and balance at all times.** This enables better control of the power tool in unexpected situations.

f. **Dress properly. Do not wear loose clothing or jewellery. Keep your hair, clothing and gloves away from moving parts.** Loose clothes, jewellery or long hair can be caught in moving parts.

g. **If devices are provided for the connection of dust extraction and collection facilities, ensure these are connected and properly used.** Use of dust collection can reduce dust-related hazards.

4. **Power tool use and care**

a. **Do not force the power tool. Use the correct power tool for your application.** The correct power tool will do the job better and safer at the rate for which it was designed.

b. **Do not use the power tool if the switch does not turn it on and off.** Any power tool that cannot be controlled with the switch is dangerous and must be repaired.

c. **Disconnect the plug from the power source and/or the battery pack from the power tool before making any adjustments, changing accessories, or storing power tools.** Such preventive safety measures reduce the risk of starting the power tool accidentally.

d. **Store idle power tools out of the reach of children and do not allow persons unfamiliar with the power tool or these instructions to operate the power tool.** Power tools are dangerous in the hands of untrained users.

e. **Maintain power tools. Check for misalignment or binding of moving parts, breakage of parts and any other condition that may affect the power tools operation. If damaged, have the power tool repaired before use.** Many accidents are caused by poorly maintained power tools.

f. **Keep cutting tools sharp and clean.** Properly maintained cutting tools with sharp cutting edges are less likely to bind and are easier to control.

g. **Use the power tool, accessories and tool bits etc. in accordance with these instructions, taking into account the working conditions and the work to be performed.** Use of the power tool for operations different from those intended could result in a hazardous situation.

5. **Service**

a. **Have your power tool serviced by a qualified repair person using only identical replacement parts.** This will ensure that the safety of the power tool is maintained.

Warning! Additional safety warnings for pole pruners.

The intended use is described in this instruction manual. Do not use the tool for purposes not intended; for example do not use the tool to fell trees. The use of any accessory or attachment or performance of any operation with this tool other than those recommended in this instruction manual may present a risk of personal injury.

- **Hold power tool by insulated gripping surfaces when performing an operation where the cutting accessory may contact hidden wiring or its own cord.** Cutting accessory contacting a "live" wire may make exposed metal parts of the power tool "live" and could give the operator an electric shock.
- Wear close fitting and protective clothing including a safety helmet with visor/goggles, ear protectors, non-skid safety footwear, protective bib trousers and strong leather gloves.
- Always position yourself out of the path of falling branches.
- The safe distance between a branch to be felled and bystanders, buildings and other objects is at least 2 1/2 times the length of the branch. Any bystander, building or object within this distance is at risk from being struck by the falling branch.
- Pre-plan a safe exit from falling trees or branches. Ensure the exit route is clear of obstacles that would prevent or hinder movement. Remember wet grass and freshly cut bark is slippery.
- Ensure someone is nearby (but at a safe distance) in case of an accident.
- Do not use the tool while standing in a tree, on a ladder or on any other unstable surface.
- Keep proper footing and balance at all times.
- Hold the tool firmly with both hands when the motor is running.
- Do not let the moving chain contact any object at the tip of the guide bar.
- Start cutting only with the chain moving at full speed.
- Do not attempt to enter a previous cut. Always make a fresh cut.
- Watch for shifting branches or other forces that could close a cut and pinch or fall into the chain.
- Do not attempt to cut a branch when the diameter of the branch exceeds the cutting length of the tool.
- Keep the saw chain sharp and properly tensioned. Check the tension at regular intervals.
- Switch the tool off, allow the chain to stop and diconnect from the mains, before carrying out any adjustment, servicing or maintenance.
- Only use genuine replacement parts and accessories.
- Carry the pole pruner by the handle with the cutter blade stopped. When transporting or storing the pole pruner always fit the cutting device cover and dismantle it into its component parts. Proper handling of the pole pruner will reduce possible personal injury and injury to others.

Causes and operator prevention of kickback

Kickback may occur when the nose or tip of the guide bar touches an object, or when the wood closes in and pinches the saw chain in the cut.

Tip contact in some cases may cause a sudden reverse reaction, kicking the guide bar up and back towards the operator.

Pinching the saw chain along the top of the guide bar may push the guide bar rapidly back towards the operator.

Either of these reactions may cause you to lose control of the chainsaw which could result in serious personal injury.

Do not rely exclusively upon the safety devices built into your chainsaw. As a chainsaw user, you should take several steps to keep your cutting jobs free from accident or injury.

Kickback is the result of tool misuse and / or incorrect operating procedures or conditions and can be avoided by taking proper precautions as given below:

- **Maintain a firm grip, with thumbs and fingers encircling the chainsaw handles. With both hands on the chainsaw, position your body and arm to allow you to resist kickback forces.** Kickback forces can be controlled by the operator, if proper precautions are taken. Do not let go of the chainsaw.
- **Do not overreach and do not cut above shoulder height.** This helps prevent unintended tip contact and enables better control of the chainsaw in unexpected situations.
- **Only use replacement guide bars and chains specified by the manufacturer.** Incorrect replacement guide bars and chains may cause chain breakage and/ or kickback.

- **Follow the manufacturer's sharpening and maintenance instructions for the saw chain.** Decreasing the depth gauge height can lead to increased kickback.
- Striking metal, cement or any other hard material near the wood, or buried in the wood can cause kickback.
- A dull or loose chain can cause kickback.
- Do not try to insert into a previous cut. As this could cause kickback. Make a fresh cut every time.

Safety of others

- This appliance is not intended for use by persons (including children) with reduced physical, sensory or mental capabilities, or lack of experience and knowledge, unless they have been given supervision or instruction concerning use of the appliance by a person responsible for their safety.
- Children should be supervised to ensure that they do not play with the appliance.

Residual risks.

Additional residual risks may arise when using the tool which may not be included in the enclosed safety warnings. These risks can arise from misuse, prolonged use etc.
Even with the application of the relevant safety regulations and the implementation of safety devices, certain residual risks can not be avoided. These include:

- Injuries caused by touching any rotating/moving parts.
- Injuries caused when changing any parts, blades or accessories.
- Injuries caused by prolonged use of a tool. When using any tool for prolonged periods ensure you take regular breaks.
- Impairment of hearing.
- Health hazards caused by breathing dust developed when using your tool (example:- working with wood, especially oak, beech and MDF.)

Vibration

The declared vibration emission values stated in the technical data and the declaration of conformity have been measured in accordance with a standard test method provided by EN 60745 and may be used for comparing one tool with another. The declared vibration emission value may also be used in a preliminary assessment of exposure.

Warning! The vibration emission value during actual use of the power tool can differ from the declared value depending on the ways in which the tool is used. The vibration level may increase above the level stated.

When assessing vibration exposure to determine safety measures required by 2002/44/EC to protect persons regularly using power tools in employment, an estimation of vibration exposure should consider, the actual conditions of use and the way the tool is used, including taking account of all parts of the operating cycle such as the times when the tool is switched off and when it is running idle in addition to the trigger time.

Warning symbols

The following warning symbols are shown on the tool:

Warning! To reduce the risk of injury, the user must read the instruction manual.

Do not use the tool in wet conditions or expose it to rain.

Always wear head and eye protection.

Wear non-slip footwear.

Beware of falling objects.

Keep bystanders away.

Electrocution hazard. Keep at least 10m away from overhead lines.

To ensure continued safe operation, check the chain tension as described in this manual after every 10 minutes of use, and adjust back to a clearance of 3 mm as required. Oil the chain after every 10 minutes of use.

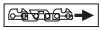

Direction of rotation of chain.

Warning! Do not touch chain at the chip ejection point.

Remove plug from the mains immediately if the cable is damaged or cut

Electrical safety

This tool is double insulated; therefore no earth wire is required. Always check that the power supply corresponds to the voltage on the rating plate.

- If the supply cord is damaged, it must be replaced by the manufacturer or an authorised Black & Decker Service Centre in order to avoid a hazard.

Using an extension cable

- Always use an approved extension cable suitable for the power input of this tool (see technical data). The extension cable must be suitable for outdoor use and marked accordingly. Up to 30 m of HO7RN-F 2 X 1.5 mm² extension cable can be used without loss of product performance. Before use, inspect the extension cable for signs of damage, wear and ageing. Replace the extension cable if damaged or defective. When using a cable reel, always unwind the cable completely.

Voltage drops

- Under certain power supply conditions this product maycause short-time voltage drops during start-up.
- Other equipment may be affected. For example, electriclights may temporarily reduce in brightness.
- Contact the supply authority, if necessary, to determine that the impedance of the power supply is lower than 0.411 ohms. Disturbances are unlikely to occur under this condition.

Guard against electric shock

- Prevent body contact with earthed or grounded surfaces (e.g. metal railings, lamp-posts etc.). Electric safety can be further improved by using a high-sensitivity (30 mA/ 30mS) Residual Current Device (RCD).

Features

This tool includes some or all of the following features.

1. On/off switch
2. Lock-off button
3. Power cord retainer
4. Strap clip
5. Angle wheel
6. Pole extension release lever
7. Sprocket cover
8. Locking nut
9. Guide bar
10. Chain
11. Oil resevoir cap
12. Sheath
13. Locking Nut Cap

Assembly

Warning!Before assembly, make sure that the appliance is switched off and unplugged.

Warning!Always wear protective gloves when working with pole pruner.

Oiling the chain

You must do this whenever you use a new chain (10) for the first time. Take the new chain (10) and soak it in chain oil for at least an hour before using it. Use BLACK+DECKER chain oil. We recommend that you use only BLACK+DECKER oil during the lifetime of your chainsaw because mixtures of different oils could lead to the oil becoming degraded, which can drastically shorten the lifetime of the saw chain and create additional risks.

Never use waste oil, thick oil or very thin sewing machine oil. These may damage your chainsaw.

Fitting the guide bar and chain (fig. A - E)

- Place the pole pruner onto a stable surface.
- Remove Locking Nut Cap (13).
- Unscrew the locking nut (8) counterclockwise to remove the sprocket cover (7) (fig. A).
- Place the chain (10) over the guide bar (9) making sure that the saw chain cutters are facing the correct direction by matching the arrow on the chain with the graphic on the sprocket cover (7) (fig. B).
- Place the chain (10) round the sprocket (14) on the saw while lining up the hole on the guide bar with the chain adjustment pin (15) (fig. C).
- The chain adjustment pin may require re-positioning by turning the screw (16) (fig.D) to align it with the hole in the guide bar.
- Support the guide bar whilst re-fitting the sprocket cover (7) and the locking nut (8)
- Place the pole pruner onto a stable surface.
- Loosen the locking nut (8) by one full turn using the spanner provided
- With a screwdriver turn the screw (16) (fig.D), clockwise increasing the chain tension.
- Check tension by pulling the chain from the chain bar (fig.E).
- Turn the screw clockwise and counter clockwise to achieve the correct tension. Tension is correct when chain snaps back to the bar after being pulled 3mm from the chain bar.

Warning! Do not over tension the chain as this will lead to excessive wear and will reduce the life of the bar and chain.

- Once chain tension is correct, tighten the locking nut (8) in the sprocket cover (7).
- Refit the Locking Nut cap (13).

Note: When the chain is new, check the tension frequently (after disconnecting from the mains) during the first 2 hours of use because a new chain stretches slightly.

Extending the pole pruner (fig. F)

- Open pole extension release lever (6) (fig.F)
- Hold the extension pole with one hand, slide the saw head away from the release lever.
- When at desired extension, close the release lever.

Warning! Periodically check the connections to ensure that they are tightened securely.

Adjusting the head angle (fig. G)

- Loosen Knob (5), support pole with one hand and rotate head with other.
- Once in desired position support head and pole whilst tightening knob (5).

Use

Warning! Let the tool work at its own pace. Do not overload.

Switching on and off (fig. H)

For your safety, this tool is equipped with a double switching system. This system prevents starting the tool inadvertently.

Switching on

- Push the lock-off button (2) using your thumb and at the same time squeeze the on/off switch with your fingers (1).
- Once the tool is running you can release the lock-off button (2).

Switching off

- Release the on/off switch (1).

Warning! Never attempt to lock a switch in the on position.

Pruning (fig. I)

Before attempting to prune a tree, ensure there are no by-laws or regulations that would prohibit or control the felling of the tree.

- Be aware of the direction a branch may fall. Consider all conditions that may affect the direction of fall, including:
  - the length and weight of the branch to be cut
  - the intended direction of fall
  - any unusual heavy limb structure or decay
  - the presence of surrounding trees and obstacles, including overhead lines, the intertwinement with other branches and the speed and direction of the wind.

Tree branches are liable to swing towards the tree trunk. In addition to the user, any bystander, building or object below the branch is at risk of being struck by the branch.

- Consider access to the tree limb.
- Make sure the tool is running at full speed before making a cut.
- Hold the tool firmly in place to avoid possible bouncing or sideways movement of the tool.
- Guide the tool through the branch using light pressure. When cutting heavy branches, where a partial cut may splinter and damage the tree, proceed as follows:
  - Make the first cut 15 cm from the tree trunk on the underside of the limb. Use the top of the guide bar (9) to make this cut.
  - Cut one third through the diameter of the limb. Then cut down from the top.

Cleaning, maintenance and storage

Your BLACK+DECKER corded/cordless appliance/tool has been designed to operate over a long period of time with a minimum of maintenance.

Continuous satisfactory operation depends upon proper tool care and regular cleaning.

Warning! Before performing any maintenance on corded/cordless power tools:

- Switch off and unplug the appliance/tool.
- Or switch off and remove the battery from the appliance/tool if the appliance/tool has a separate battery pack.
- Or run the battery down completely if it is integral and then switch off.

Regularly clean the ventilation slots in your appliance/tool/charger using a soft brush or dry cloth.

Regularly clean the motor housing using a damp cloth. Do not use any abrasive or solvent-based cleaner.

After use and before storage

- Regularly clean the ventilation slots with a clean, dry paint brush.
- To clean the appliance/tool/charger, use only mild soap and a damp cloth. Never let any liquid get inside and never immerse any part into liquid.
- Remove debris using a hard brush.
- Lubricate the chain with oil.

Checking and adjusting the chain tension (fig. E)

- Check the saw chain tension. The tension is correct when the saw chain (10) snaps back after being pulled away 3 mm from the saw chain bar with light force from the middle finger and thumb. There should be no ‘sag’ between the guide bar (9) and the saw chain (10) on the underside.

To adjust the tension:

- Loosen the Locking nut (8).
- Turn the screw (16) clockwise.

Warning! Do not over-tension the chain as this will lead to excessive wear and will reduce the life of the bar and chain.

- Once the chain tension is correct, tighten the chain locking nut (8).

Warning! When the saw chain is new, check the tension frequently during the first two hours of use as a new saw chain stretches slightly.

Oiling the chain

This pole pruner is equipped with an auto oiling system that keeps the saw chain and guide bar constantly lubricated. The saw chain must be oiled using only the correct grade of oil (cat. no. A6027).

- Oil the whole saw chain (10) evenly

Mains plug replacement (U.K. & Ireland only)

If a new mains plug needs to be fitted:

- Safely dispose of the old plug.
- Connect the brown lead to the live terminal in the new plug.
- Connect the blue lead to the neutral terminal.

Warning! No connection is to be made to the earth terminal. Follow the fitting instructions supplied with good quality plugs. Recommended fuse: 5 A.

Protecting the environment

Separate collection. This product must not be disposed of with normal household waste.

Should you find one day that your BLACK+DECKER product needs replacement, or if it is of no further use to you, do not dispose of it with household waste. Make this product available for separate collection.

Separate collection of used products and packaging allows materials to be recycled and used again. Re-use of recycled materials helps prevent environmental pollution and reduces the demand for raw materials.

Local regulations may provide for separate collection of electrical products from the household, at municipal waste sites or by the retailer when you purchase a new product. BLACK+DECKER provides a facility for the collection and recycling of BLACK+DECKER products once they have reached the end of their working life. To take advantage of this service please return your product to any authorised repair agent who will collect them on our behalf.

You can check the location of your nearest authorised repair agent by contacting your local BLACK+DECKER office at the address indicated in this manual. Alternatively, a list of authorised BLACK+DECKER repair agents and full details of our after-sales service and contacts are available on the Internet at: www.2helpU.com

Technical data

		PS7525 (Type 1)
Voltage	V_{AC}	**230**
No-load chain speed	min^{-1}	114
Max. Cutting Length	cm	17
Weight	Kg	3.5

Level of sound pressure according to EN ISO 11680-1, EN ISO 3744:
Sound pressure (L_{pA}) 78 dB(A), uncertainty (K) 3 dB(A)
Sound power (L_{WA}) 98 dB(A), uncertainty (K) 3 dB(A)

Vibration total values (triax vector sum) according to EN 60745:
Cutting freshly felled softwood ($a_{h,W}$) = < 2.5 m/s^2, uncertainty (K) 1.5 m/s^2

EC declaration of conformity

MACHINERY DIRECTIVE

CE

PS7525

Black & Decker declares that these products described under "technical data" are in compliance with:
2006/42/EC and EN 60745-1
These products also comply with Directive 2014/30/EU and 2011/65/EU.

For more information, please contact Black & Decker at the following address or refer to the back of the manual.
The undersigned is responsible for compilation of the technical file and makes this declaration on behalf of Black & Decker.

R.Laverick
Engineering Manager
Black & Decker Europe, 210 Bath Road, Slough,
Berkshire, SL1 3YD
United Kingdom
09/10/2014

Guarantee

Black & Decker is confident of the quality of its products and offers an outstanding guarantee. This guarantee statement is in addition to and in no way prejudices your statutory rights. The guarantee is valid within the territories of the Member States of the European Union and the European Free Trade Area.

If a Black & Decker product becomes defective due to faulty materials, workmanship or lack of conformity, within 24 months from the date of purchase, Black & Decker guarantees to replace defective parts, repair products subjected to fair wear and tear or replace such products to ensure minimum inconvenience to the customer unless:

- The product has been used for trade, professional or hire purposes;
- The product has been subjected to misuse or neglect;
- The product has sustained damage through foreign objects, substances or accidents;
- Repairs have been attempted by persons other than authorised repair agents or Black & Decker service staff.

To claim on the guarantee, you will need to submit proof of purchase to the seller or an authorised repair agent. You can check the location of your nearest authorised repair agent by contacting your local Black & Decker office at the address indicated in this manual. Alternatively, a list of authorised Black & Decker repair agents and full details of our after-sales service and contacts are available on the Internet at: www.2helpU.com

Please visit our website www.blackanddecker.co.uk to register your new BLACK+DECKER product and to be kept up to date on new products and special offers. Further information on the BLACK+DECKER brand and our range of products is available at www.blackanddecker.co.uk

Australia	Black & Decker (Australia) Pty. Ltd. 20 Fletcher Road, Mooroolbark, Victoria, 3138	Tel. Fax	03-8720 5100 03-9727 5940
New Zealand	Black & Decker 5 Te Apunga Place Mt Wellington Aukland 1060	Tel. Fax	+64 9 259 1133 +64 9 259 1122
United Kingdom & **Republic Of Ireland** www.blackanddecker.co.uk emeaservice@sbdinc.com	Black & Decker 210 Bath Road Slough, Berkshire SL1 3YD	Tel. Fax	01753 511234 01753 512365

ОФИЦИАЛЬНЫЙ ДИЛЕР В УКРАИНЕ:
storgom.ua

ГРАФИК РАБОТЫ:
Пн. – Пт.: с 8:30 по 18:30
Сб.: с 09:00 по 16:00
Вс.: с 10:00 по 16:00

КОНТАКТЫ:
+38 (044) 360-46-77
+38 (066) 77-395-77
+38 (097) 77-236-77
+38 (093) 360-46-77

Детальное описание товара:
https://storgom.ua/product/vysotorez-blackdecker-ps7525.html
Другие товары: https://storgom.ua/vysotorezy.html