ILLUSTRATED PARTS LIST

MODEL NUMBER **ST 68EP**
PRODUCT NUMBER 961 91 00-65
MFG. ID. NUMBER 96191006503

588 92 60-01

SNOW THROWER - MODEL NO. ST 68EP (96191006503), PRODUCT NO. 961 91 00-65

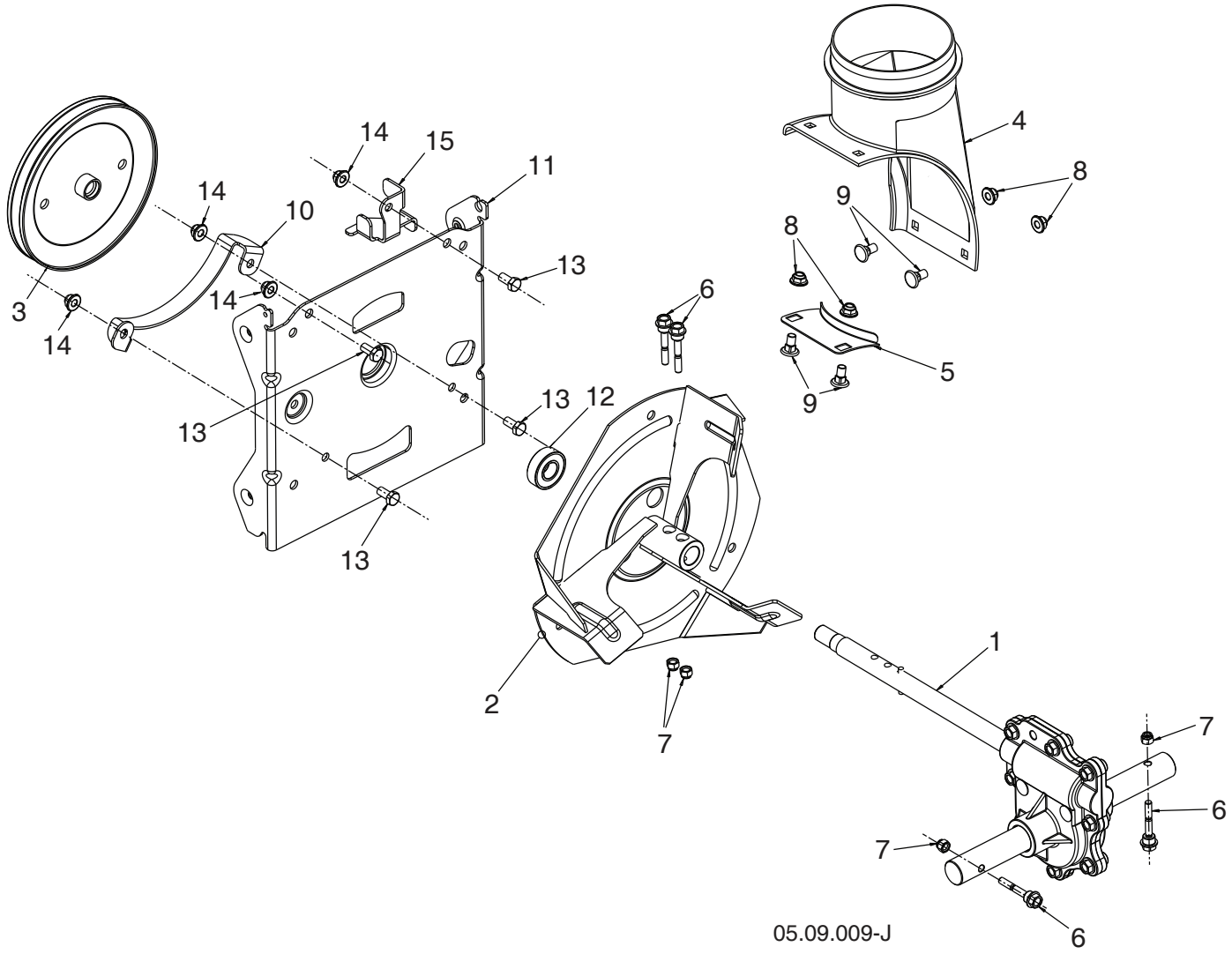

NOTE: All component dimensions given in U.S. inches. 1 inch = 25.4 mm
IMPORTANT: Use only Original Equipment Manufacturer (O.E.M.) replacement parts.
Failure to do so could be hazardous, damage your snow thrower and void your warranty.

SNOW THROWER - MODEL NO. ST 68EP (96191006503), PRODUCT NO. 961 91 00-65

KEY NO.	PART NO.	DESCRIPTION
1	501 14 96-01	GEARBOX AUGER
2	586 60 72-02	IMPELLER STEEL
3	587 40 24-01	PULLEY IMPELLER – SCREW ON
4	585 05 69-01	CHUTE DISCHARGE BASE
5	532 18 40-95	BRACKET CORNER DISCHARGE BASE
6	588 07 75-01	BOLT SHEAR 1/4-20
7	873 80 04-00	NUT NYLOCK 1/4-20
8	585 69 13-01	NUT FLANGE NYLOCK 5/16-18 - BLK
9	585 69 12-01	BOLT CARRIAGE WAFER HEAD 5/16-18 X 5/8 BLK
10	581 63 20-02	BRACKET BELT KEEPER LOWER
11	581 59 25-02	BRACKET INTERFACE
12	532 19 87-91	BEARING BALL
13	532 16 31-83	SCREW HEX HEAD 5/16-18 X 5/8
14	532 42 79-42	NUT FLANGE NYLOCK 5/16-18
15	587 58 72-02	LOWER AUGER BELT GUIDE

NOTE: All component dimensions given in U.S. inches. 1 inch = 25.4 mm
IMPORTANT: Use only Original Equipment Manufacturer (O.E.M.) replacement parts.
Failure to do so could be hazardous, damage your snow thrower and void your warranty.

SNOW THROWER - MODEL NO. ST 68EP (96191006503), PRODUCT NO. 961 91 00-65

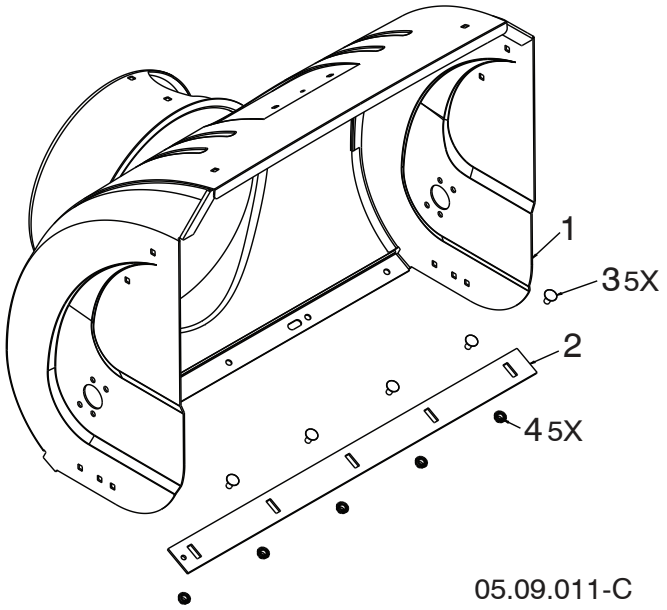

KEY NO.	PART NO.	DESCRIPTION
1	581 70 83-73	AUGER HOUSING
2	532 40 77-27	SCRAPER BAR
3	872 27 05-05	CARRIAGE BOLT 5/16-18 X .625 GR5
4	532 15 53-77	NUT 5/16-18

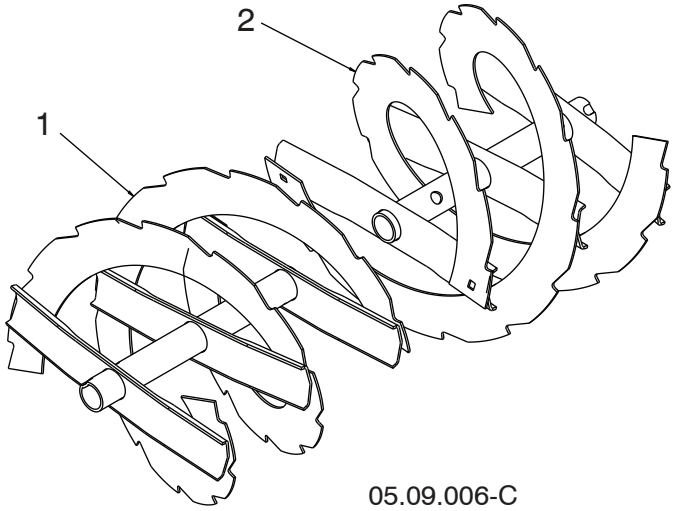

KEY NO.	PART NO.	DESCRIPTION
1	532 42 11-35	AUGER 27 LH
2	532 42 11-23	AUGER 27 RH

NOTE: All component dimensions given in U.S. inches. 1 inch = 25.4 mm
IMPORTANT: Use only Original Equipment Manufacturer (O.E.M.) replacement parts.
Failure to do so could be hazardous, damage your snow thrower and void your warranty.

SNOW THROWER - MODEL NO. ST 68EP (96191006503), PRODUCT NO. 961 91 00-65

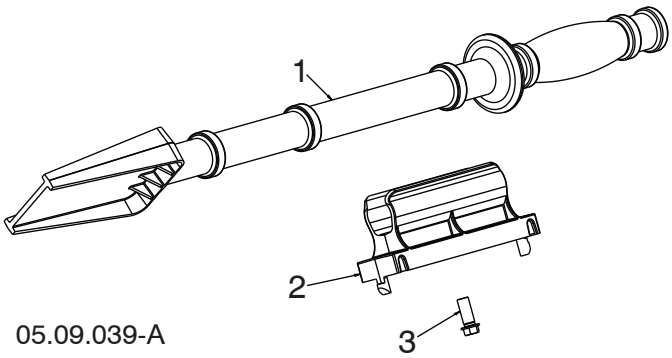

KEY NO.	PART NO.	DESCRIPTION
1	532 19 21-99	TOOL CLEANOUT
2	532 40 54-00	CLIP CLEANOUT TOOL
3	532 19 41 89	SCREW HEX WASHER 13-16 X 5/8

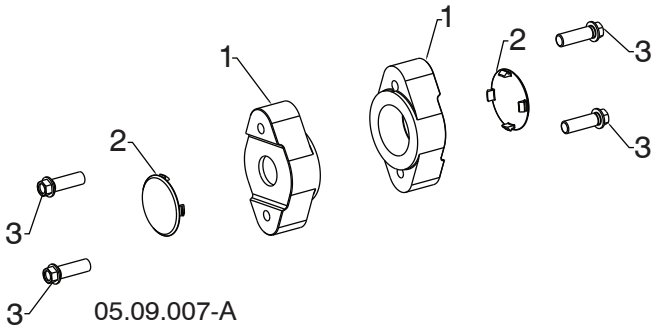

KEY NO.	PART NO.	DESCRIPTION
1	532 42 04-78	AUGER BEARING
2	532 41 19-39	BEARING PLUG
3	584 29 94-01	SCREW HI-LO WASHD 5/16-14 X 1.00

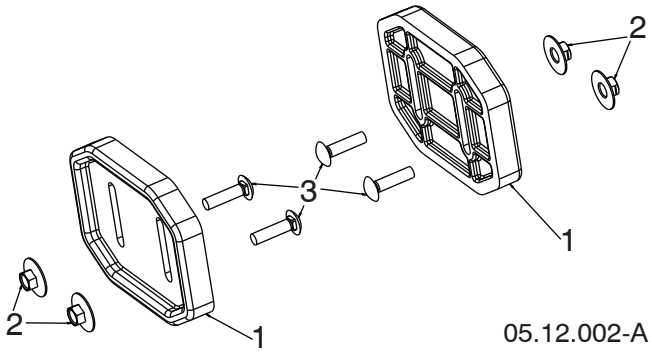

KEY NO.	PART NO.	DESCRIPTION
1	532 43 59-51	PLATE SKID PLASTIC HDPE
2	585 80 28-01	NUT LARGE FLANGE 5/16-18 – BLK
3	585 80 29-01	BOLT CARRIAGE 5/16-18 X 1.25 – BLK

NOTE: All component dimensions given in U.S. inches. 1 inch = 25.4 mm
IMPORTANT: Use only Original Equipment Manufacturer (O.E.M.) replacement parts.
Failure to do so could be hazardous, damage your snow thrower and void your warranty.

SNOW THROWER - MODEL NO. ST 68EP (96191006503), PRODUCT NO. 961 91 00-65

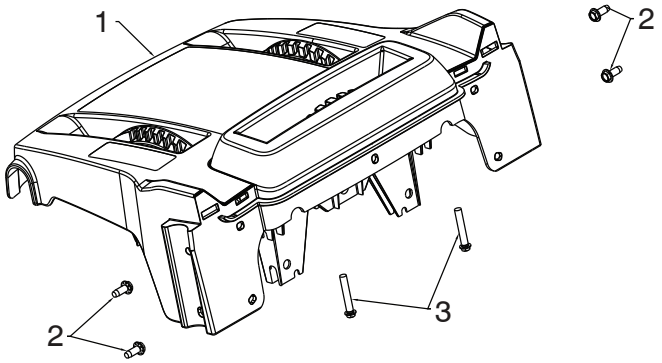

05.07.021-A

KEY NO.	PART NO.	DESCRIPTION
1	581 13 12-06	CONSOLE BASE MULTI CONTROL
2	817 06 04-10	SCREW TA SEMI GIMLE 1/4-20 X .62
3	581 32 95-01	SCREW HEX WASHER 13-16 X 1.50

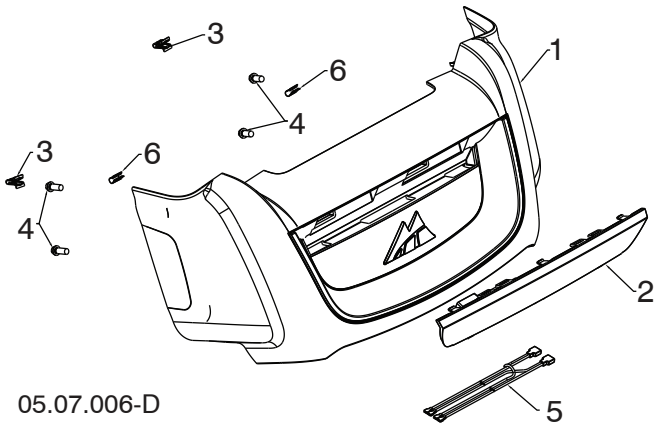

05.07.006-D

KEY NO.	PART NO.	DESCRIPTION
1	585 51 19-01	MCCULLOCH CONSOLE COVER ASM
2	585 70 65-01	LIGHT ASSEMBLY
3	581 92 87-01	PANEL CLIP
4	532 19 41-89	SCREW HI-LO 13-16 X 5/8
5	585 86 83-01	WIRE HARNESS LIGHT JUMPER
6	587 69 84-01	CLIP U SPRING

NOTE: All component dimensions given in U.S. inches. 1 inch = 25.4 mm
IMPORTANT: Use only Original Equipment Manufacturer (O.E.M.) replacement parts.
Failure to do so could be hazardous, damage your snow thrower and void your warranty.

SNOW THROWER - MODEL NO. ST 68EP (96191006503), PRODUCT NO. 961 91 00-65

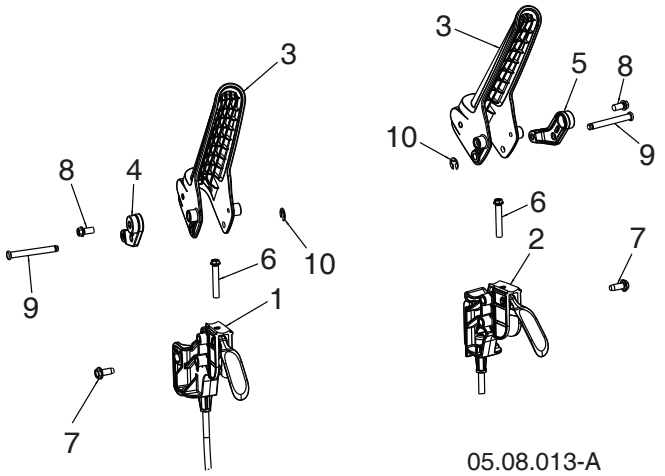

05.08.013-A

KEY NO.	PART NO.	DESCRIPTION
1	588 26 39-01	CABLE, POWER STEER - LHS
2	588 26 39-02	CABLE, POWER STEER - RHS
3	587 46 30-01	LEVER, CONTROL
4	587 73 97-01	LEVER, CABLE ARM - LHS
5	587 73 97-02	LEVER, CABLE ARM - RHS
6	581 32 95-01	SCREW HI-LO 13-16 X 1.50
7	817 06 04-10	SCREW 1/4-20 X .625
8	817 41 13-08	SCREW HI-LW 13-16 X .500
9	588 14 77-01	PIN, GROOVED
10	812 00 00-14	E-RING

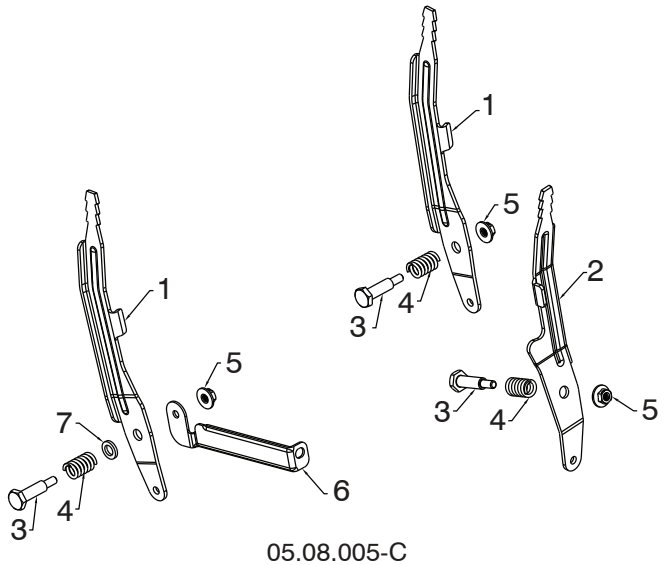

05.08.005-C

KEY NO.	PART NO.	DESCRIPTION
1	581 12 39-02	LEVER CONTROL SPEED/DEFL
2	581 24 16-02	LEVER CONTROL CHUTE ROT
3	581 32 97-01	BOLT SHOULDER 1/4-20
4	581 32 96-01	SPRING COMPRESSION
5	586 66 89-01	NUT FL LOCK 1/4-20
6	584 46 84-02	BRACE SUPPORT SPEED
7	587 03 13-01	WASHER .625 X .375 X .094 NYLON 6/6

NOTE: All component dimensions given in U.S. inches. 1 inch = 25.4 mm
IMPORTANT: Use only Original Equipment Manufacturer (O.E.M.) replacement parts.
Failure to do so could be hazardous, damage your snow thrower and void your warranty.

SNOW THROWER - MODEL NO. ST 68EP (96191006503), PRODUCT NO. 961 91 00-65

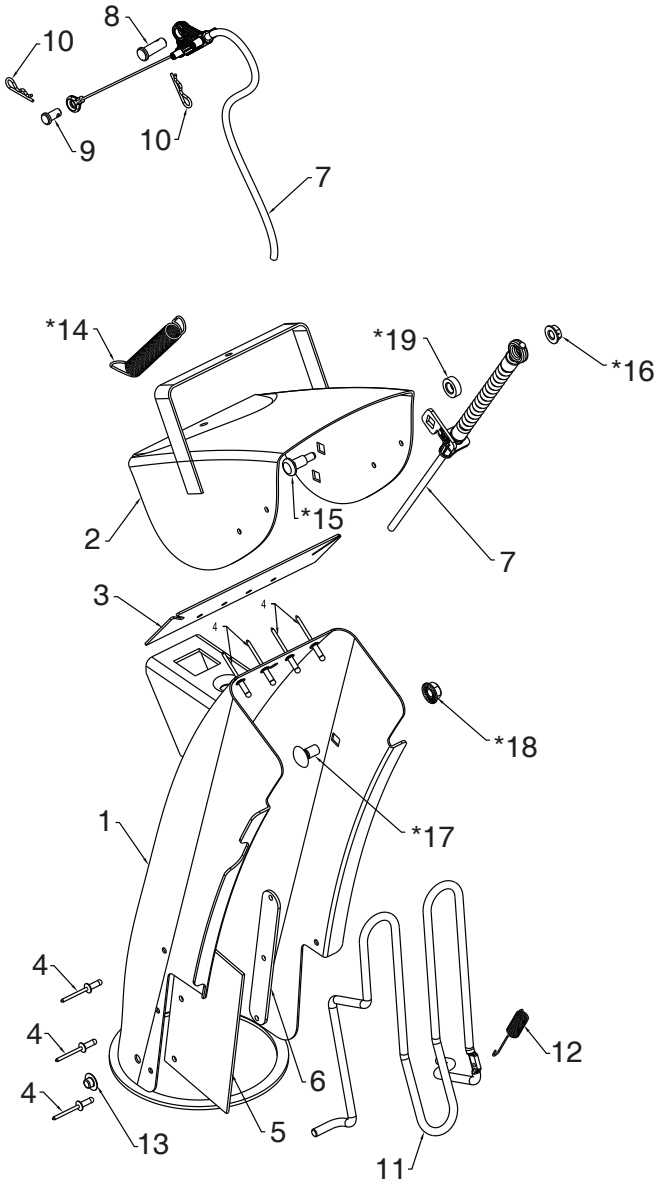

05.11.008-E

KEY NO.	PART NO.	DESCRIPTION
1	588 07 78-03	CHUTE WELDMENT (INCLUDES 1, 2, 3, 4, 5, 6)
2	- - - - - - - - - -	DEFLECTOR WELDMENT
3	- - - - - - - - - -	DEFLECTOR SEAL
4	- - - - - - - - - -	POP RIVET
5	- - - - - - - - - -	CHUTE SNOW SHIELD
6	- - - - - - - - - -	SHIELD STRAP RETAINER
7	586 96 15-01	CABLE ASM DEFLECTOR - BOWDEN
8	581 32 94-01	PIN CLEVIS 5/16 X .875
9	585 80 83-01	PIN CLEVIS 1/4 X .312
10	532 42 33-03	HAIRPIN RETAINER
11	532 43 55-82	CHUTE GUARD
12	532 43 56-16	GUARD RETURN SPRING
13	532 05 93-49	PUSH NUT
*14	532 18 45-05	DEFLECTOR SPRING
*15	501 41 73-01	CARRIAGE BOLT 1/4-20 X .544
*16	585 69 14-01	NUT 1/4-20
*17	585 83 20-01	CARRIAGE BOLT 3/8-16 X .625
*18	873 97 05-00	NUT 5/16-18
*19	501 41 74-01	WASHER .326 X .625 X .205 NYLON

NOTE: ALL ITEMS MARKED WITH AN * ARE PROVIDED IN THE BAG OF ITEMS SHIPPED LOOSE WITH PRODUCT.

NOTE: All component dimensions given in U.S. inches. 1 inch = 25.4 mm
IMPORTANT: Use only Original Equipment Manufacturer (O.E.M.) replacement parts.
Failure to do so could be hazardous, damage your snow thrower and void your warranty.

SNOW THROWER - MODEL NO. ST 68EP (96191006503), PRODUCT NO. 961 91 00-65

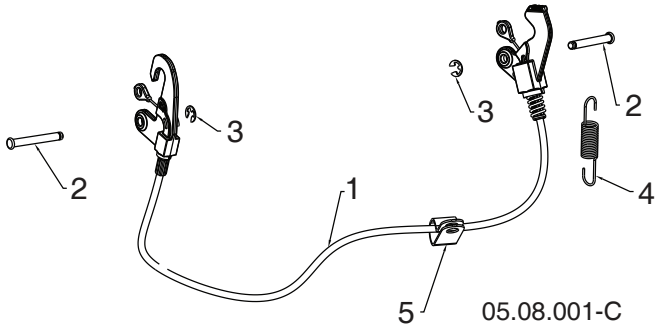

KEY NO.	PART NO.	DESCRIPTION
1	587 33 25-02	CABLE INTERLOCK
2	532 43 17-62	PIN GROOVED
3	812 00 00-14	E-RING
4	581 15 12-01	SPRING RETURN
5	532 19 79-91	CLIP CABLE BLACK

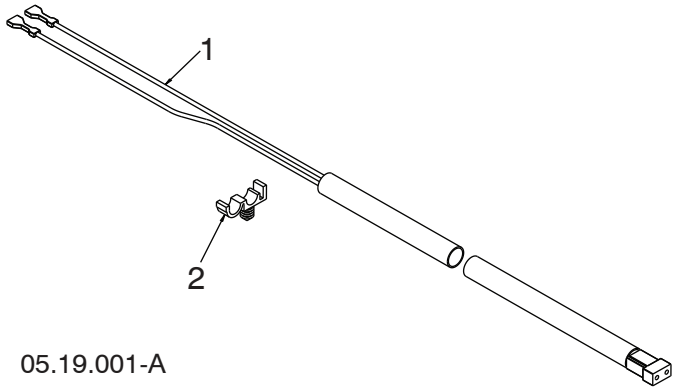

KEY NO.	PART NO.	DESCRIPTION
1	588 06 42-01	HARNESS WIRE LIGHTS
2	532 14 50-06	WIRE RETAINER

NOTE: All component dimensions given in U.S. inches. 1 inch = 25.4 mm
IMPORTANT: Use only Original Equipment Manufacturer (O.E.M.) replacement parts.
Failure to do so could be hazardous, damage your snow thrower and void your warranty.

SNOW THROWER - MODEL NO. ST 68EP (96191006503), PRODUCT NO. 961 91 00-65

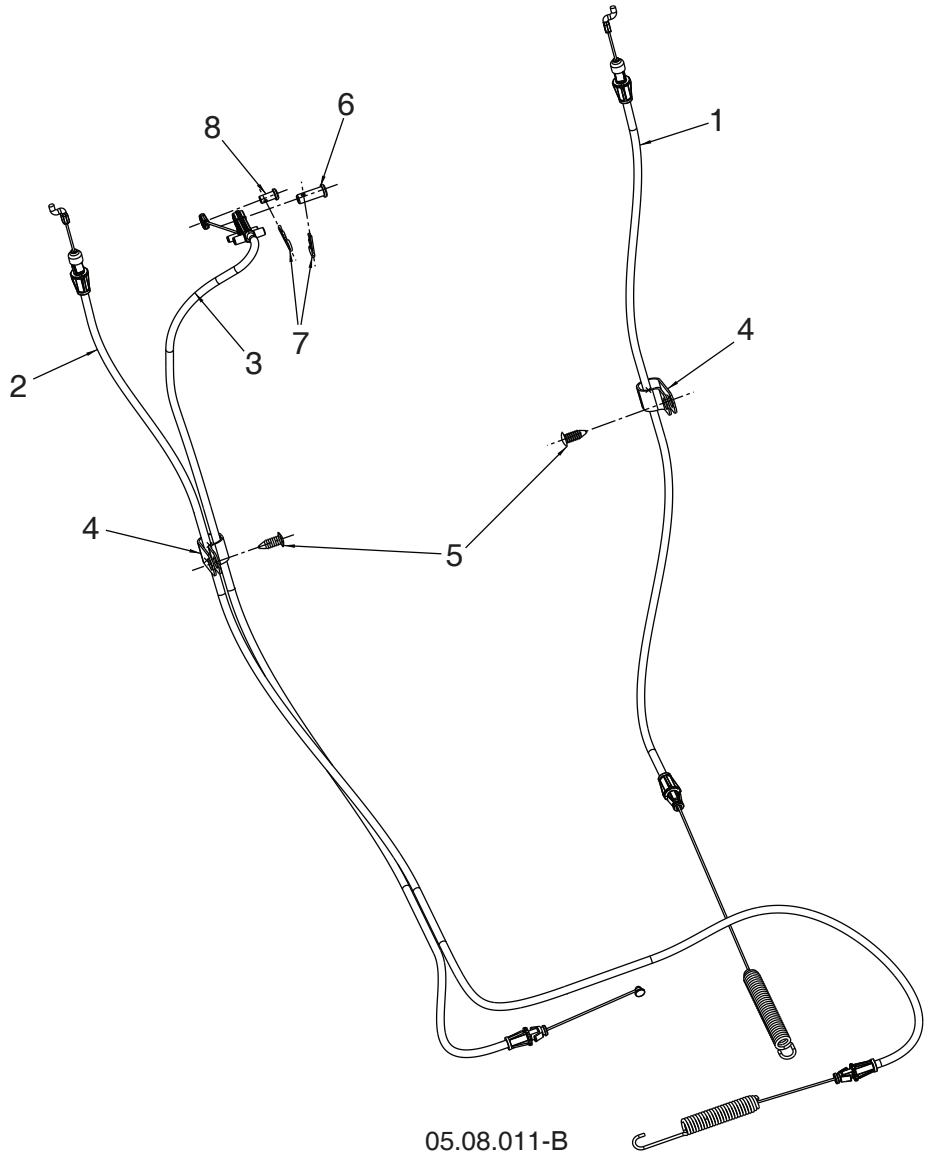

05.08.011-B

KEY NO.	PART NO.	DESCRIPTION
1	588 11 37-02	CABLE CONTROL DRIVE
2	588 11 38-01	CABLE CONTROL AUGER
3	588 12 23-01	CABLE CONTROL SPEED
4	532 19 79-91	CLIP CABLE
5	532 42 81-24	FASTENER PUSH .250
6	581 32 94-01	PIN CLEVIS 5/16
7	532 42 33-03	HAIRPIN
8	585 80 83-01	PIN CLEVIS 1/4

NOTE: All component dimensions given in U.S. inches. 1 inch = 25.4 mm
IMPORTANT: Use only Original Equipment Manufacturer (O.E.M.) replacement parts. Failure to do so could be hazardous, damage your snow thrower and void your warranty.

SNOW THROWER - MODEL NO. ST 68EP (96191006503), PRODUCT NO. 961 91 00-65

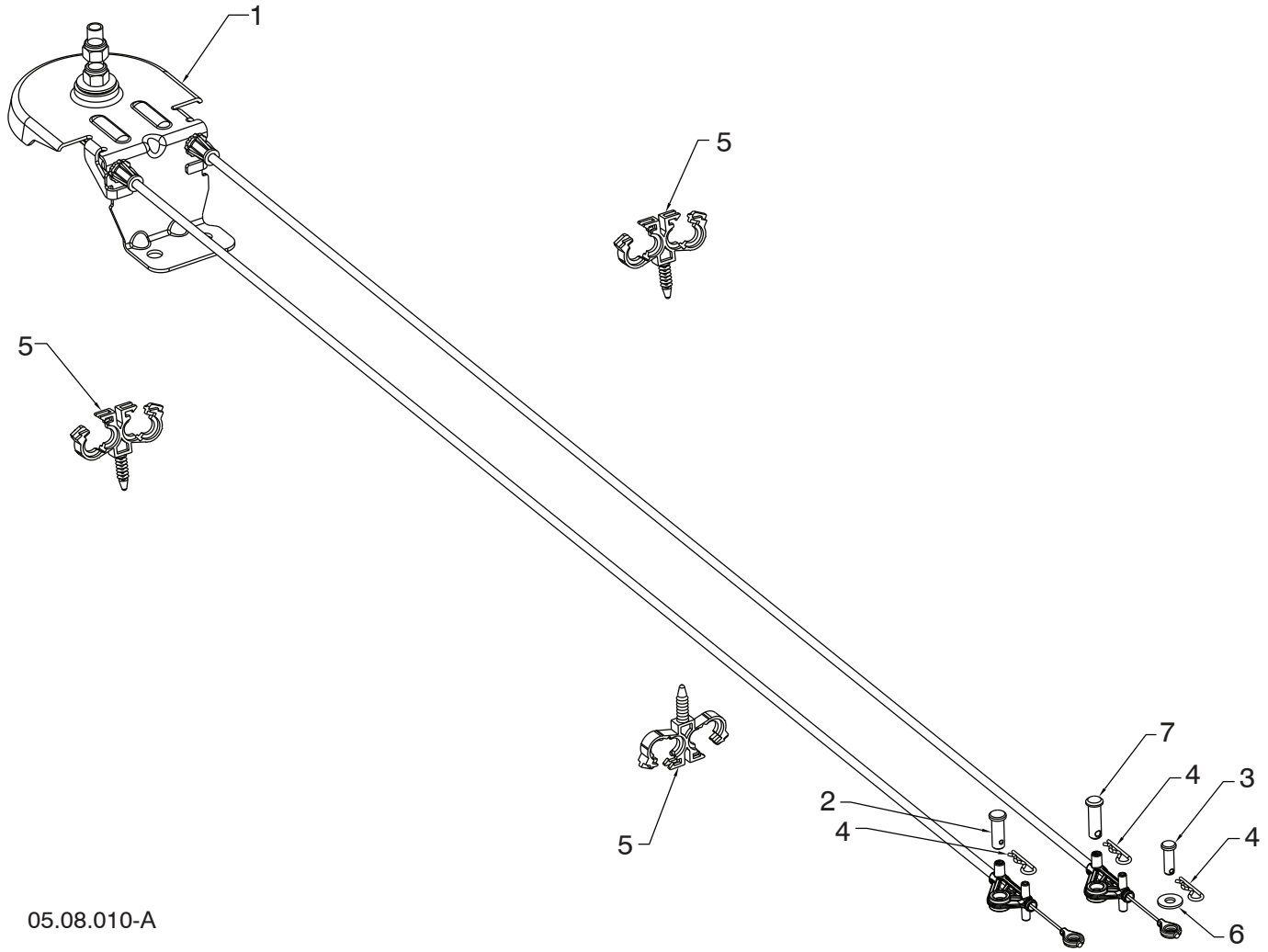

KEY NO.	PART NO.	DESCRIPTION
1	587 80 34-01	CABLE CHUTE ROTATOR ASM
2	581 32 94-01	PIN CLEVIS 5/6 X 7/8
3	877 10 08-12	PIN CLEVIS 1/4 X 3/4
4	532 42 33-03	HAIRPIN SOFT ZINC
5	584 65 22-01	CLIP CONDUIT DOUBLE
6	586 68 21-01	WASHER
7	587 13 08-01	PIN CLEVIS 5/16 X 1

NOTE: All component dimensions given in U.S. inches. 1 inch = 25.4 mm
IMPORTANT: Use only Original Equipment Manufacturer (O.E.M.) replacement parts.
Failure to do so could be hazardous, damage your snow thrower and void your warranty.

SNOW THROWER - MODEL NO. ST 68EP (96191006503), PRODUCT NO. 961 91 00-65

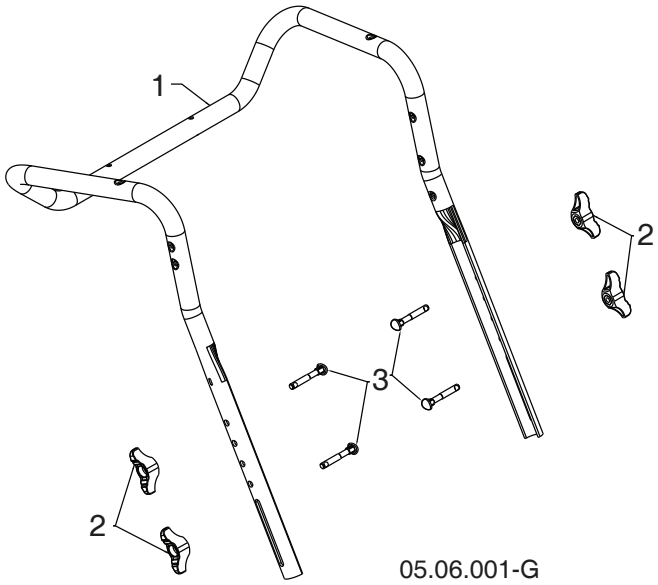

KEY NO.	PART NO.	DESCRIPTION
1	588 16 08-02	UPPER HANDLE
2	532 19 19-38	HANDLE KNOB STD BLACK
3	588 05 99-01	SCREW 5/16-18 X 2.25 CONCAVE HEAD WITH PATCH

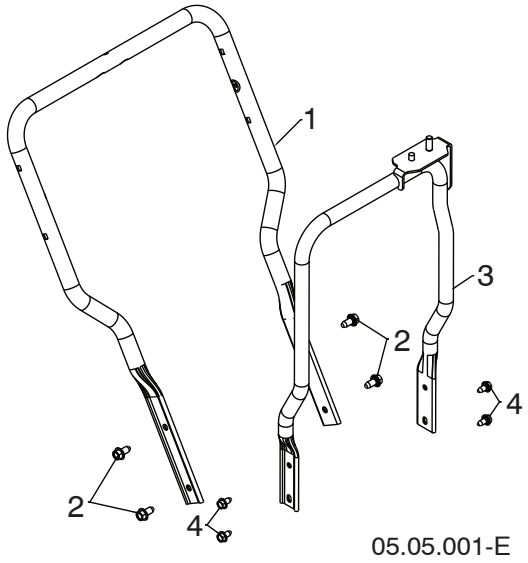

KEY NO.	PART NO.	DESCRIPTION
1	588 67 21-02	LOWER HANDLE
2	817 00 06-12	SCREW HEX WASH HD 3/8-16 X .75
3	581 62 20-02	CHUTE ROTATOR SUPPORT ASM
4	817 00 05-10	BOLT HEX 5/16-18

NOTE: All component dimensions given in U.S. inches. 1 inch = 25.4 mm
IMPORTANT: Use only Original Equipment Manufacturer (O.E.M.) replacement parts.
Failure to do so could be hazardous, damage your snow thrower and void your warranty.

SNOW THROWER - MODEL NO. ST 68EP (96191006503), PRODUCT NO. 961 91 00-65

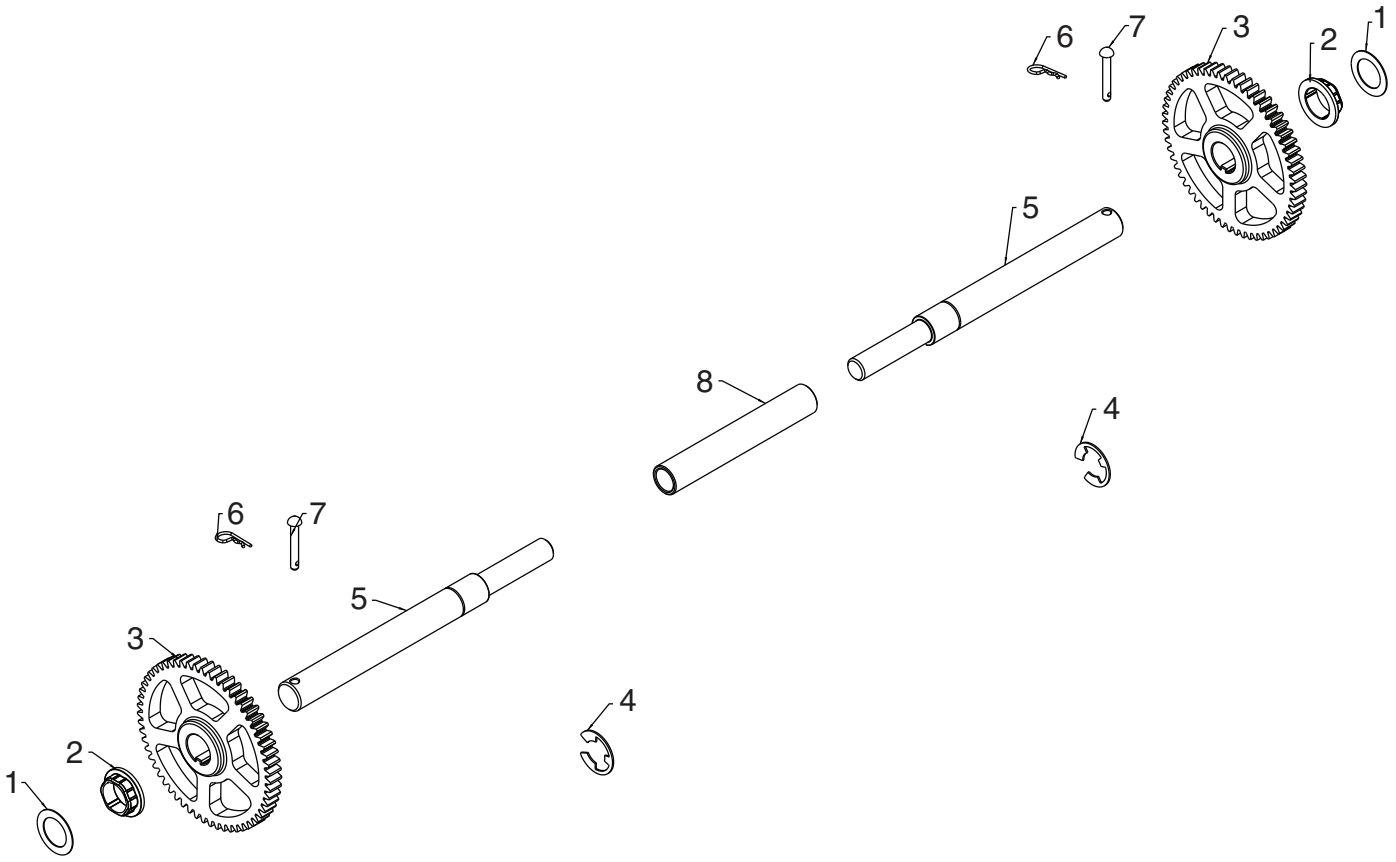

05.03.002-B

KEY NO.	PART NO.	DESCRIPTION
1	532 44 49-49	WASHER 1.00
2	587 97 89-01	BUSHING HEX 1 SHAFT
3	588 51 86-01	GEAR 59T DRIVEN
4	812 00 00-53	RETAINING RING
5	580 75 26-01	AXLE SHAFT SPLIT
6	532 12 47-88	RETAINER SPRING 1 ZINC
7	532 17 12-71	RIVET RD HD DRILLED 1/4 DIA
8	580 75 25-01	AXLE SLEEVE

NOTE: All component dimensions given in U.S. inches. 1 inch = 25.4 mm
IMPORTANT: Use only Original Equipment Manufacturer (O.E.M.) replacement parts.
Failure to do so could be hazardous, damage your snow thrower and void your warranty.

SNOW THROWER - MODEL NO. ST 68EP (96191006503), PRODUCT NO. 961 91 00-65

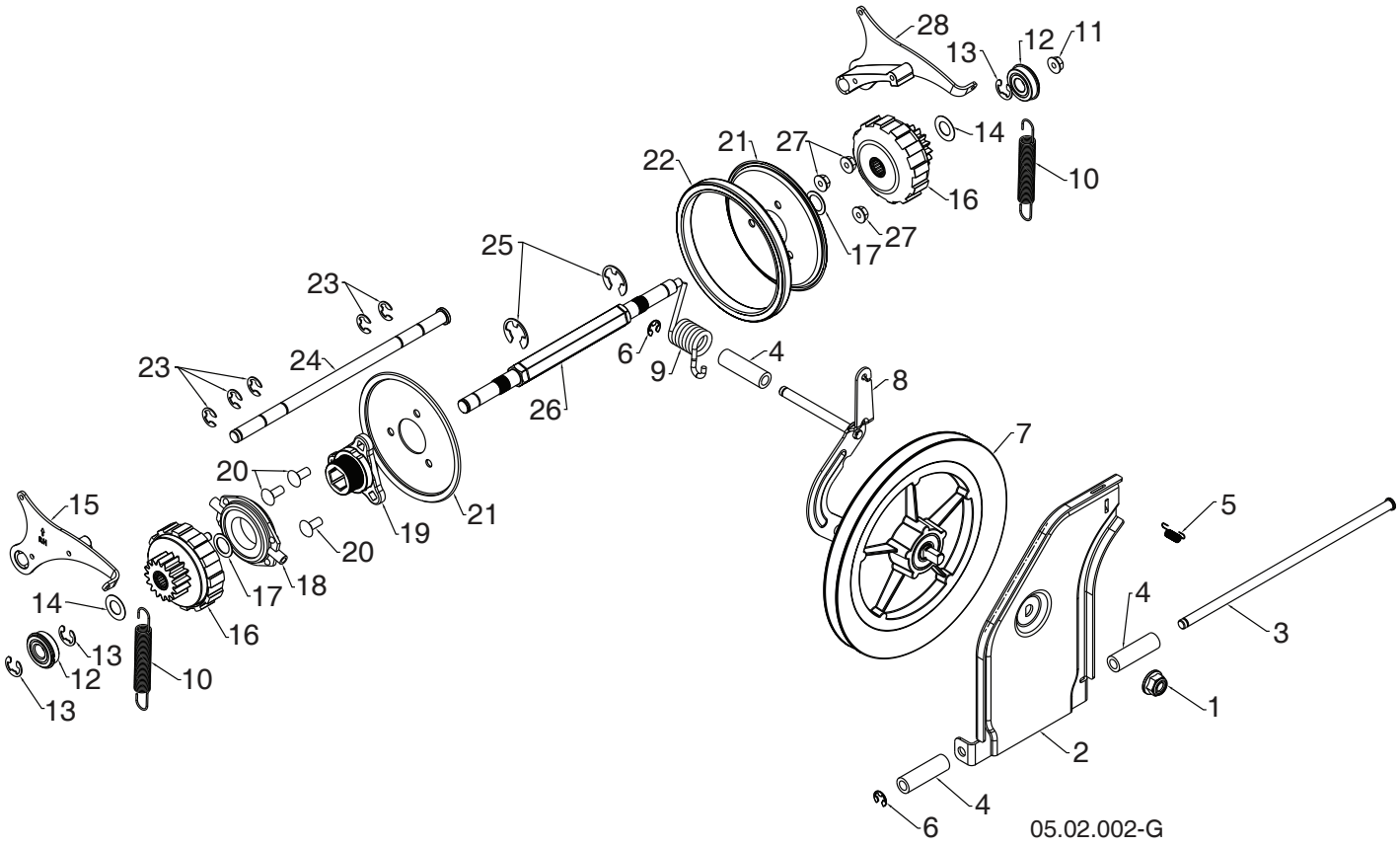

NOTE: All component dimensions given in U.S. inches. 1 inch = 25.4 mm
IMPORTANT: Use only Original Equipment Manufacturer (O.E.M.) replacement parts.
Failure to do so could be hazardous, damage your snow thrower and void your warranty.

SNOW THROWER - MODEL NO. ST 68EP (96191006503), PRODUCT NO. 961 91 00-65

KEY NO.	PART NO.	DESCRIPTION
1	521 99 11-01	NUT HEX FLANGE LK 1/2-13
2	587 70 34-02	SWING PLATE FRICTION PULL
3	581 12 30-01	ROD TIP PLATE
4	581 73 27-01	SPACER DRIVE
5	532 19 38-85	LATCH SPRING
6	812 00 00-07	E-RING RETAINER
7	581 32 84-01	FRICTION DISC COMBO PULLEY
8	587 19 34-03	BRACKET YOKE ASSEMBLY
9	581 31 53-01	SPRING TORSION DRIVE
10	585 26 38-01	EXTENSION SPRING
11	585 69 15-01	NUT HEX FLANGE LOCK 5/16-18
12	580 75 62-01	BEARING 9/16 I.D. 1622-2RSNR
13	580 75 61-02	RETAINING RING 1622-2RSNR
14	580 75 13-01	WASHER FLAT .59 I.D. X 1.065 X 25 GA
15	580 75 66-01	PAWL ASM RH
16	580 75 60-01	GEAR ASM PLANETARY
17	580 75 63-01	WASHER FLAT .6875 I.D. X 1.00 X 21 GA
18	532 17 53-44	TRUNNION BEARING ASM
19	581 09 09-01	HUB RUBBER WHEEL
20	872 11 05-06	BOLT CARRIAGE 5/16-18 X .75
21	581 09 10-02	PLATE RUBBER WHEEL
22	581 09 11-01	RING RUBBER WHEEL
23	586 64 43-01	E-RING
24	580 75 51-01	ROD PAWL
25	812 00 00-22	E-RING
26	580 75 24-01	SHAFT REDUCTION PWR STR
27	532 75 11-53	NUT HEX FLANGE LK 5/16-18
28	580 75 67-01	PAWL ASM LH

NOTE: All component dimensions given in U.S. inches. 1 inch = 25.4 mm
IMPORTANT: Use only Original Equipment Manufacturer (O.E.M.) replacement parts.
Failure to do so could be hazardous, damage your snow thrower and void your warranty.

SNOW THROWER - MODEL NO. ST 68EP (96191006503), PRODUCT NO. 961 91 00-65

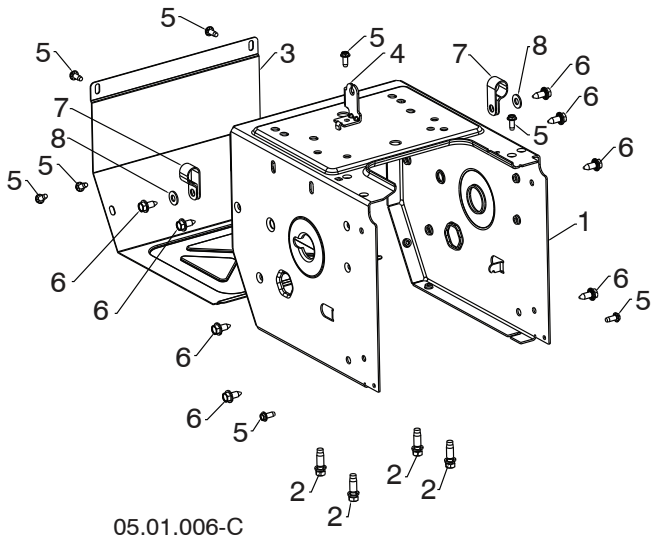

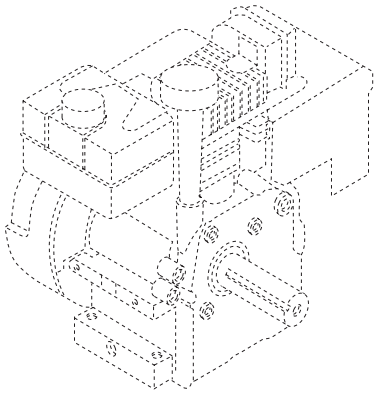

KEY NO.	PART NO.	DESCRIPTION
- -	- - - - - - - -	B&S ENGINE 15C107-0029-F8
1	580 83 94-03	FRAME
2	532 15 04-06	ENGINE BOLT 3/8-16 X 1.280 DOGPOINT
3	580 83 95-03	FRAME COVER
4	501 06 04-03	SHIFTER BRACKET
5	817 06 04-10	SCREW HEX WASHER 1/4-20 X 5/8
6	532 42 88-67	BOLT HEXHD WASHER 5/16-18 X .75
7	532 19 79-91	P CLIP
8	585 69 09-01	WASHER .343 X .750 X 16GA BLACK

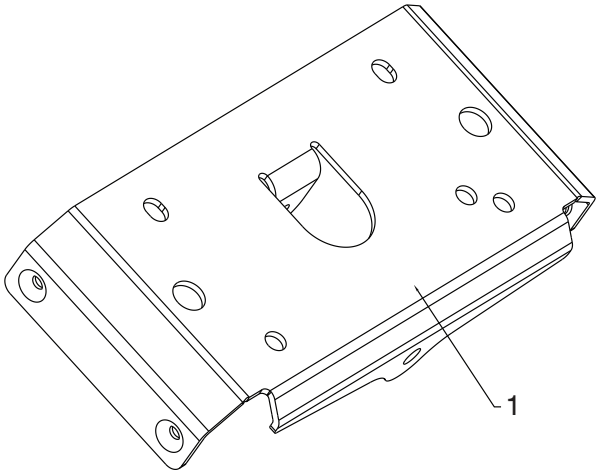

KEY NO.	PART NO.	DESCRIPTION
1	583 94 05-02	SMALL MOUNTING PLATE

NOTE: All component dimensions given in U.S. inches. 1 inch = 25.4 mm
IMPORTANT: Use only Original Equipment Manufacturer (O.E.M.) replacement parts.
Failure to do so could be hazardous, damage your snow thrower and void your warranty.

SNOW THROWER - MODEL NO. ST 68EP (96191006503), PRODUCT NO. 961 91 00-65

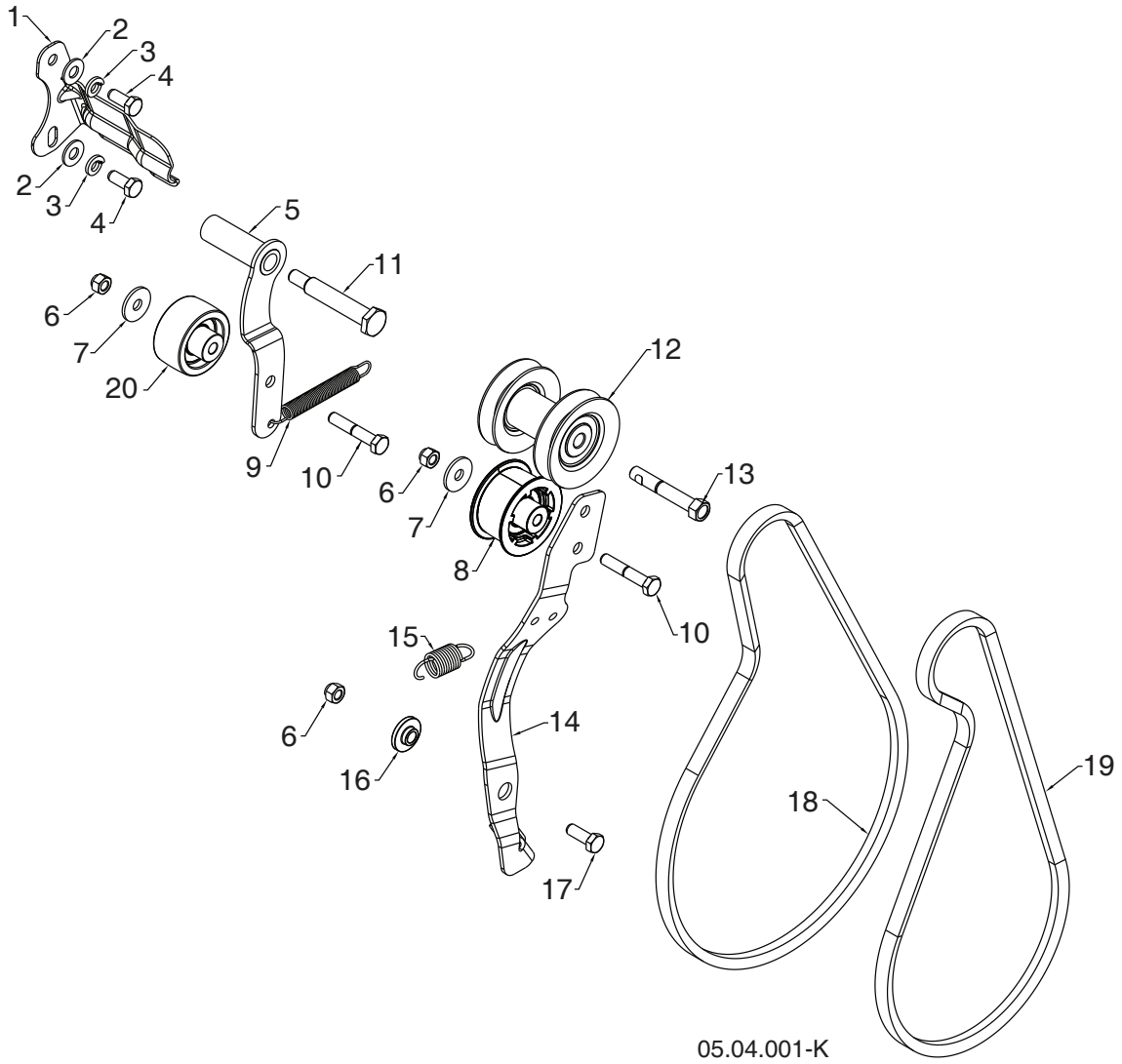

KEY NO.	PART NO.	DESCRIPTION
1	588 49 28-02	BELT KEEPER BRACKET
2	819 11 12-16	WASHER 11/32 X 3/4 X 16 GA
3	810 04 05-00	LOCKWASHER 5/16 SPLIT HVY
4	874 61 05-12	CAPSCREW HEXHD 5/16-24 X .75 GR 5
5	581 33 82-03	IDLER ARM DRIVE WELDMENT
6	873 80 05-00	NUT NYLOCK 5/16-18
7	532 05 92-89	WASHER FLAT .328 X 1.00 X .097
8	581 14 14-01	IDLER PULLEY 2.0 W/SPACER
9	580 75 30-01	RETURN SPRING IDLER ARM DRIVE
10	874 76 05-28	BOLT HEXHD 5/16-18 X 1.75
11	581 41 38-01	SHOULDER BOLT 5/16-24 X 2.15
12	587 89 37-03	PULLEY ASM ENGINE
13	582 38 84-01	BOLT HEXHD 3/8-24 X 2.375
14	580 83 11-06	ARM IDLER
15	587 03 12-01	RETURN SPRING IDLER ARM
16	587 34 37-01	BUSHING IDLER PIVOT
17	874 76 05-14	BOLT HEXHD 5/16-18 X .875
18	584 21 61-02	DRIVE BELT 4L X 38.2
19	501 81 82-01	IMPELLER BELT
20	586 88 02-01	IDLER PULLEY 2.0 FLANGELESS W/SPACER

NOTE: All component dimensions given in U.S. inches. 1 inch = 25.4 mm
IMPORTANT: Use only Original Equipment Manufacturer (O.E.M.) replacement parts.
Failure to do so could be hazardous, damage your snow thrower and void your warranty.

SNOW THROWER - MODEL NO. ST 68EP (96191006503), PRODUCT NO. 961 91 00-65

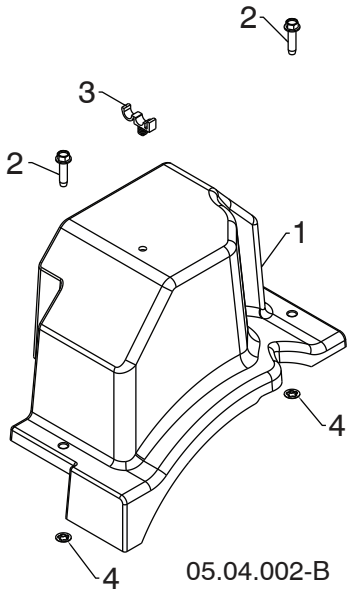

KEY NO.	PART NO.	DESCRIPTION
1	587 10 54-01	BELT COVER BLACK ASSEMBLY (INCLUDES 2 & 4)
2	- - - - - - - - -	BOLT HEX WSH THDRL 1/4-20 X 1
3	532 14 50-06	CABLE GUIDE
4	- - - - - - - - -	PALNUT 1/4 IN

NOTE: All component dimensions given in U.S. inches. 1 inch = 25.4 mm
IMPORTANT: Use only Original Equipment Manufacturer (O.E.M.) replacement parts.
Failure to do so could be hazardous, damage your snow thrower and void your warranty.

SNOW THROWER - MODEL NO. ST 68EP (96191006503), PRODUCT NO. 961 91 00-65

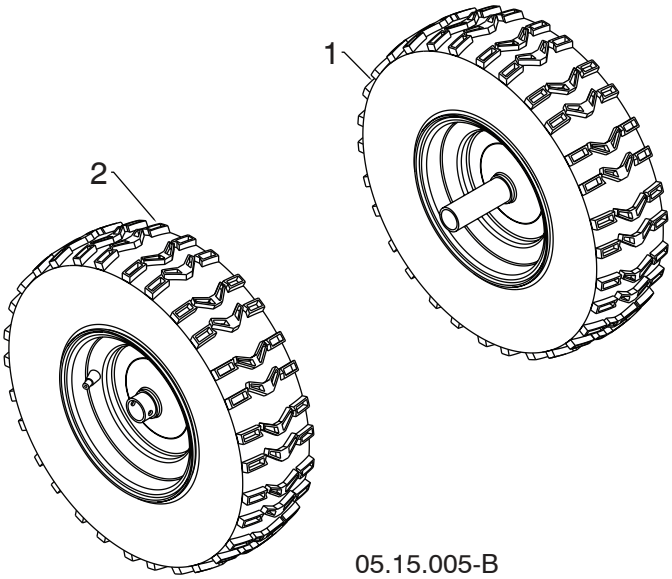

KEY NO.	PART NO.	DESCRIPTION
1	532 43 63-56	WHEEL 16X4.80 NPS LH 1.00 K478
2	532 43 63-49	WHEEL 16X4.80 NPS RH 1.00 K478

NOTE: All component dimensions given in U.S. inches. 1 inch = 25.4 mm
IMPORTANT: Use only Original Equipment Manufacturer (O.E.M.) replacement parts.
Failure to do so could be hazardous, damage your snow thrower and void your warranty.

SNOW THROWER - MODEL NO. ST 68EP (96191006503), PRODUCT NO. 961 91 00-65

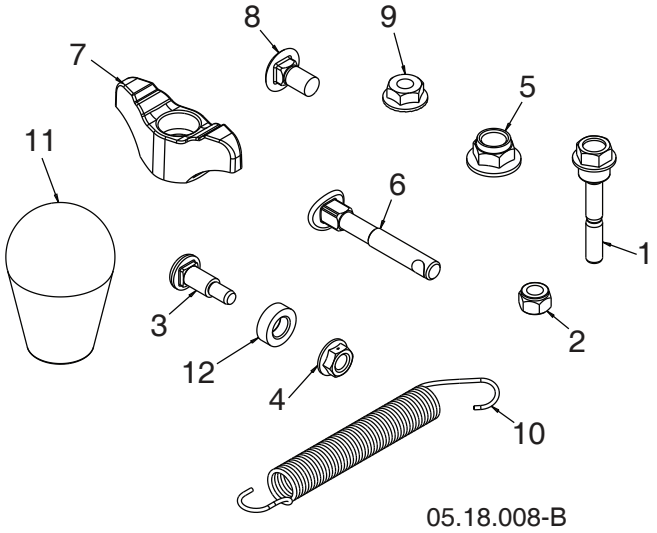

KEY NO.	PART NO.	DESCRIPTION
1	588 07 75-01	BOLT 1/4-20 X 1.81
2	873 80 04-00	NUT NYLOCK 1/4-20
3	501 41 73-01	BOLT SHOULDER
4	585 69 14-01	NUT HEX FL 1/4-20 CTR
5	588 25 29-01	NUT NYLOCK 3/8-16
6	588 05 99-01	BOLT 5/16-18 X 2.25 CONCAVE
7	532 18 97-13	KNOB 5/16-18 X .625
8	585 83 20-01	BOLT 5/16-18 X .625
9	873 97 05-00	NUT SERR FL LOCK 5/16-18
10	532 18 45-05	SPRING DEFLECT CHUTE
11	581 69 75-01	KNOB SOFT TOUCH SLOTTED
12	501 41 74-01	WASHER NYLON
NI	580 94 77-05	BAG PLASTIC 6.5 X 10.5 WARNING
NI	588 07 76-06	KIT REPLACEMETN BAG OF PARTS

01.14.007-A

KEY NO.	PART NO.	DESCRIPTION
1	532 19 30- 71	SAFETY IGNITION KEY

NOTE: All component dimensions given in U.S. inches. 1 inch = 25.4 mm
IMPORTANT: Use only Original Equipment Manufacturer (O.E.M.) replacement parts.
Failure to do so could be hazardous, damage your snow thrower and void your warranty.

SNOW THROWER - MODEL NO. ST 68EP (96191006503), PRODUCT NO. 961 91 00-65

05.16.002-B

KEY NO.	PART NO.	DESCRIPTION
1	532 18 40-45	DECAL AUGER
2	532 19 96-82	DECAL CHUTE
3	532 19 96-83	DECAL AUGER SAFETY
4	532 18 40-28	DECAL BELT GUIDE
5	588 04 98-01	DECAL NOISE LEVEL

NOTE: All component dimensions given in U.S. inches. 1 inch = 25.4 mm
IMPORTANT: Use only Original Equipment Manufacturer (O.E.M.) replacement parts.
Failure to do so could be hazardous, damage your snow thrower and void your warranty.

SNOW THROWER - MODEL NO. ST 68EP (96191006503), PRODUCT NO. 961 91 00-65

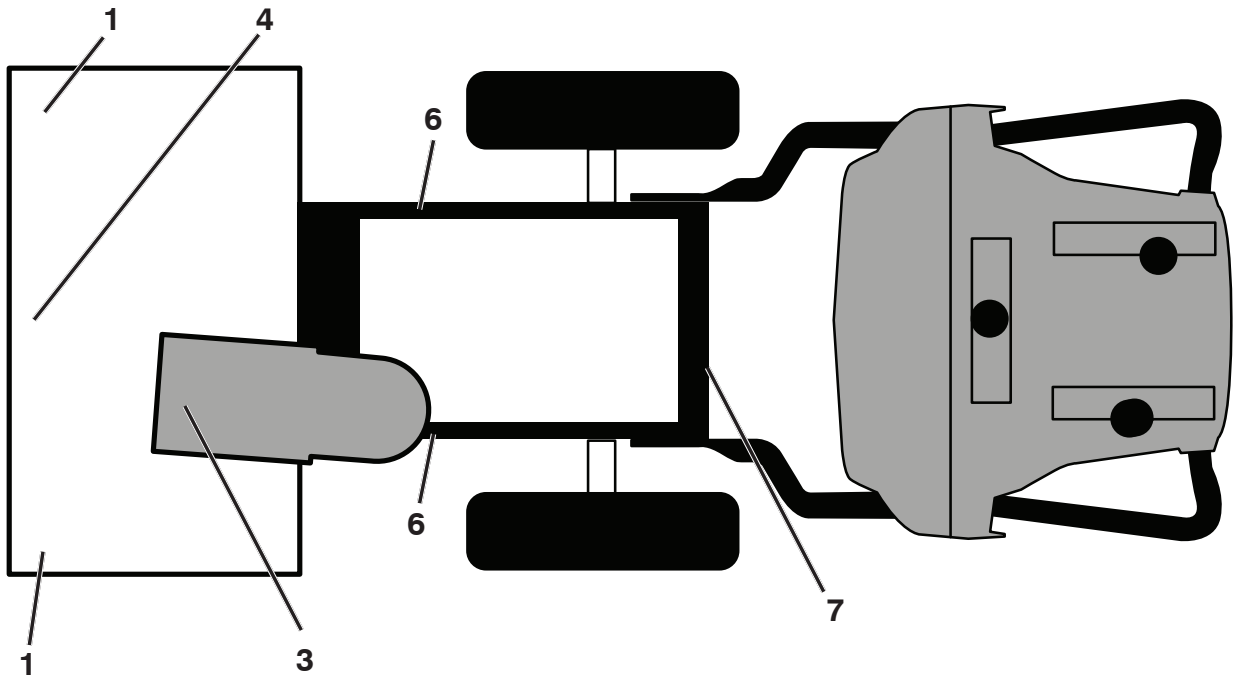

KEY NO.	PART NO.	DESCRIPTION
1	532 19 96-83	DECAL, DANGER READ OWNER'S
3	532 19 96-82	DECAL, DANGER, DEFLECTOR CHUTE
4	532 18 40-45	DECAL, DANGER AUGER
6	532 18 40-28	DECAL, INSTRUCTION BELT GUARD
7	532 18 04-33	DECAL, NOISE LEVEL 105DB/CE INT
- -	115 82 78-20	OPERATOR'S MANUAL, EURO
- -	115 82 78-10	OPERATOR'S MANUAL, SCAN
- -	115 82 78-50	OPERATOR'S MANUAL, EBLOC
- -	115 82 78-40	OPERATOR'S MANUAL, BALTIC

NOTE: All component dimensions given in U.S. inches. 1 inch = 25.4 mm
IMPORTANT: Use only Original Equipment Manufacturer (O.E.M.) replacement parts.
Failure to do so could be hazardous, damage your snow thrower and void your warranty.

ОФИЦИАЛЬНЫЙ ДИЛЕР В УКРАИНЕ:
storgom.ua

ГРАФИК РАБОТЫ:
Пн. – Пт.: с 8:30 по 18:30
Сб.: с 09:00 по 16:00
Вс.: с 10:00 по 16:00

КОНТАКТЫ:
+38 (044) 360-46-77
+38 (066) 77-395-77
+38 (097) 77-236-77
+38 (093) 360-46-77

Детальное описание товара: https://storgom.ua/product/snegouborshchik-mcculloch-st-68ep.html
Другие товары: https://storgom.ua/snegouborshchiki.html