MASALTA®

OPERATION MANUAL
PLATE COMPACTOR MS60

WARNING

CE

To reduce the risk of injury, all operators and maintenance personnel must read and understand these instructions before operating, changing accessories, or performing maintenance on Masalta power equipment. All possible situations cannot be covered in these instructions. Care must be exercised by everyone using, Maintaining or working near this equipment.

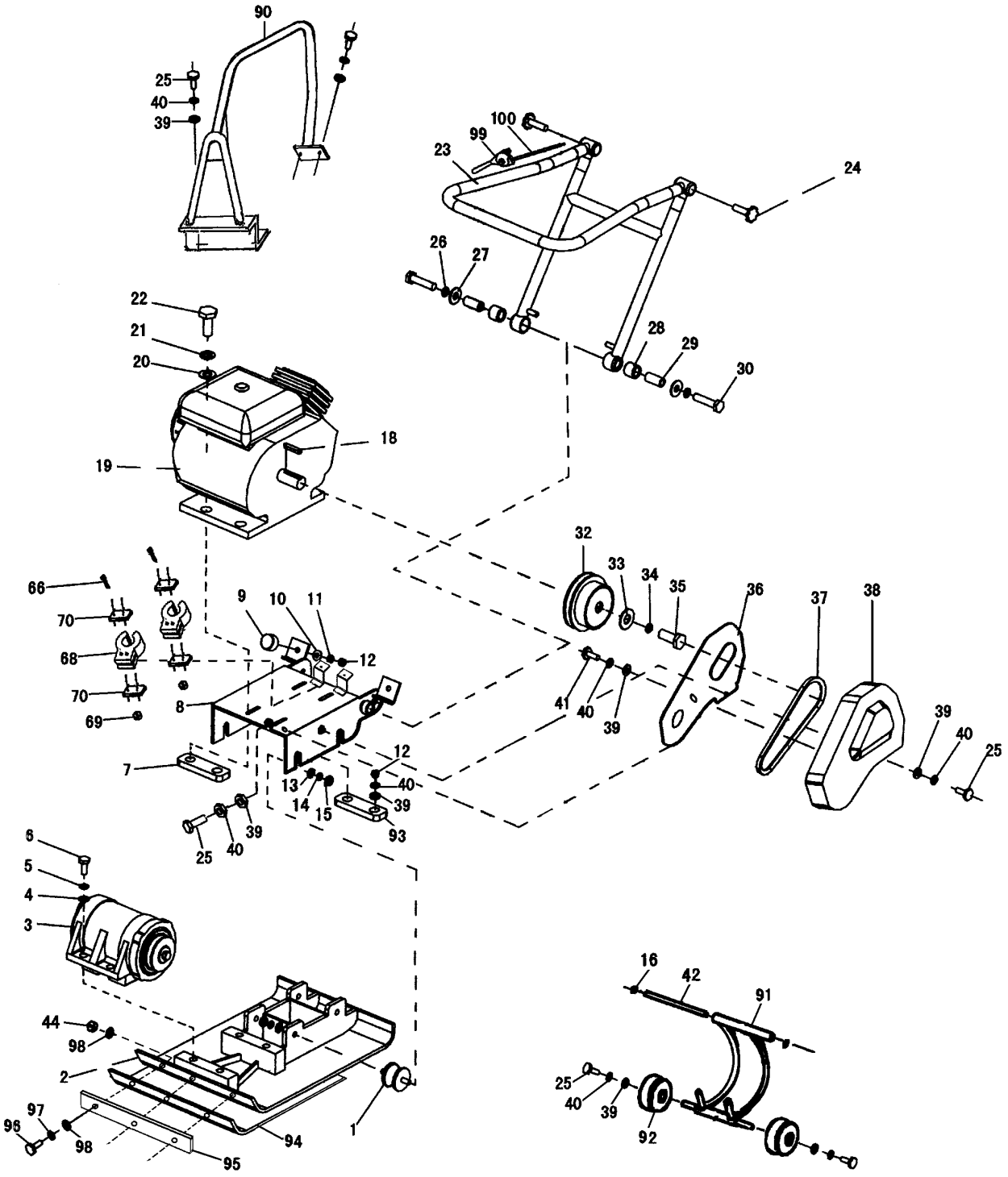

MS60 PARTS LIST 1

MS60 PARTS LIST 1

ITEM NO.	PART NO.	DESCRIPTION	QTY
1	103100	SHOCK ABSORBER	4
2	103000	BASE PLATE	1
3	104000	VIBRATOR ASSY	1
4	095016	WASHER 16-GB93	4
5	093016	SPRING WASHER 16-GB93	4
6	057016-40	BOLT M16 X 40 - GB5783-86	4
7	105100	ENGINE NUT	2
8	105000	ENGINE MOUNTING PLATE WITH WHEEL PLATE	1
	105000-1	ENGINE MOUNTING PLATE WITHOUT WHEEL PLATE	1
9	106100	CUSHION PAD	2
10	095010	WASHER 10 - GB95	2
11	093010	SPRING WASHER 10-GB93	2
12	061010	NUT M10 - GB6170	2
13	095010	WASHER 10 - GB95	8
14	093010	SPRING WASHER 10 - GB93	8
15	061010	NUT M10 - GB6170	8
16	089013	CIRCLIP FOR SHAFT 13 - GB894 (OPTIONAL)	2
18	010005	KEY	1
19	101000-1	HONDA ENGINE	1
	101000-2	ROBIN ENGINE	1
20	095008	WASHER 8 - GB95	4
21	093008	SPRING WASHER 8-GB93	4
22	057008-40	BOLT M8 X 40 - GB5783	4
23	106000	FOLDABLE HANDLE ASSY.	1
24	106007	KNOB	2
25	057008-25	BOLT M8 X 25 - GB5783	9
26	093012	SPRING WASHER 12 - GB93	2
27	096012	WASHER 12 - GB96	2
28	106002	RUBBER MOUNT	2

(TO BE CONTINUED)

MS60 PARTS LIST 1

ITEM NO.	PART NO.	DESCRIPTION	QTY
29	106003	COLLAR	2
30	057012	BOLT M12 x 55-GB5782	2
32	152000	CLUTCH PULLEY ASSY.	1
33	152005	CLUTCH WASHER	1
34	093008	SPRING WASHER 8-GB93	1
35	057008-25	BOLT M8 X 25 - GB5783	1
36	107001	INSIDE BELT COVER	1
37	011544	V-BELT SPA - GB11544	1
38	107000	BELT COVER	1
39	095008	WASHER 8 - GB95	11
40	093008	SPRING WASHER 8-GB93	11
41	057008-16	BOLT M8 X 16 - GB5783	3
42	108100	WHEEL PIN	1
44	061010	NUT M10 - GB6170	1
66	057006	BOLT M6 X 30	4
68	105001	RUBBER CLIP	2
69	061006	NUT M6	4
70	105002	CLIP PLATE	4
90	101100	PROTECTIVE FRAME (OPTIONAL)	1
91	108001	WHEEL SHAFT	1
92	108002	WHEEL	2
93	105003	NUT STRIP	1
94	103001	RUBBER MAT (OPTIONAL)	1
95	103002	FIX STRIP (OPTIONAL)	1
96	057010-40	BOLT M10X40-GB5783 (OPTIONAL)	3
97	093010	SPRING WASHER 10-GB93 (OPTIONAL)	3
98	095010	WASHER10 - GB95 (OPTIONAL)	6
99	A2004001-1	THROTTLE CONTROL LEVER (OPTIONAL)	1
100	1560006-2	THROTTLE CONTROL WIRE (OTIONAL)	1

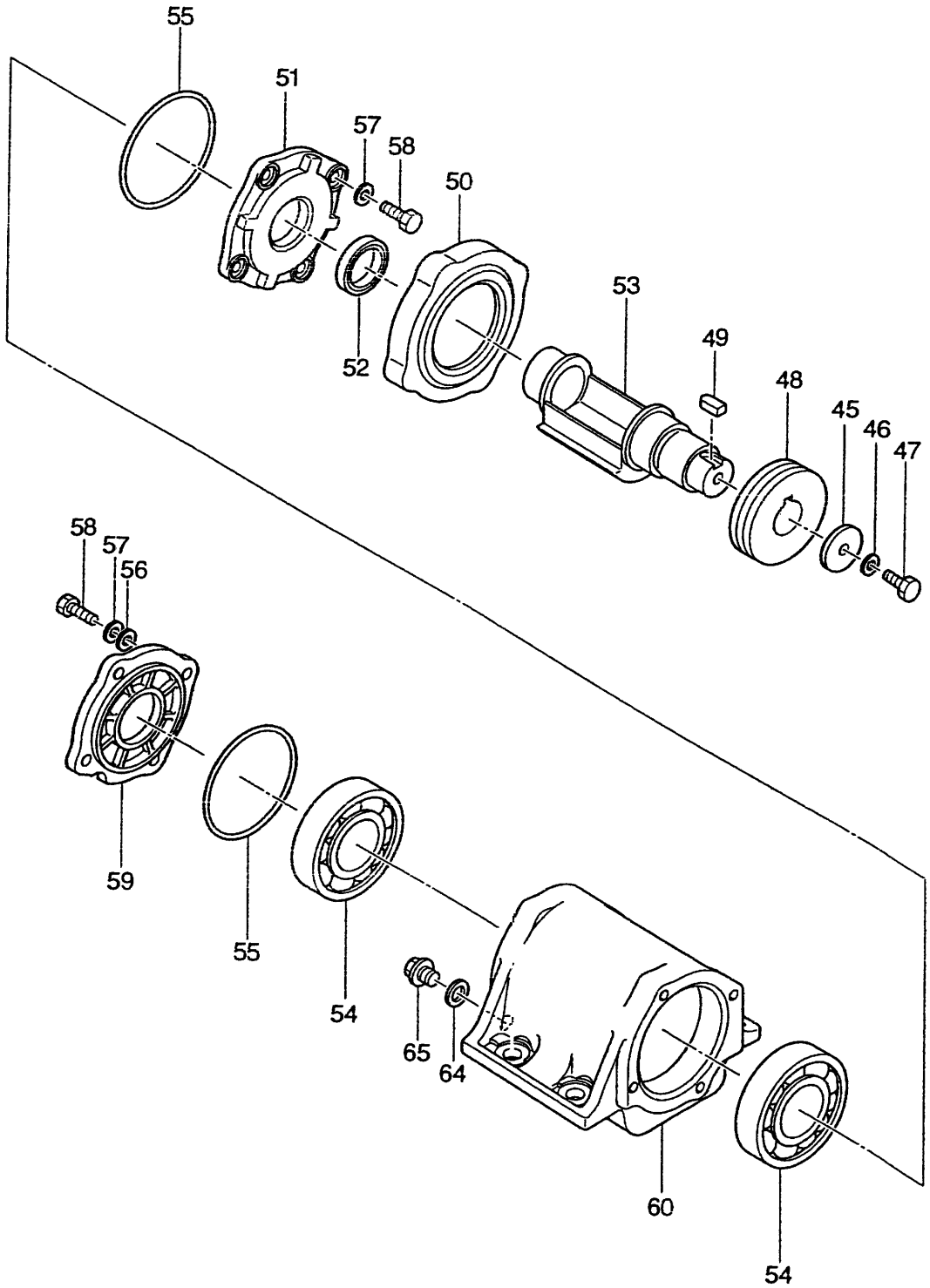

MS60 PARTS LIST 2

MS60 PARTS LIST 2

ITEM NO.	PART NO.	DESCRIPTION	QTY
45	154003	WASHER	1
46	093010	SPRING WASHER 10 - GB93	1
47	057010-25	BOLT M10 x 25-GB5783	1
48	154004-1	PULLEY FOR HONDA ENGINE	1
	154004-2	PULLEY FOR ROBIN ENGINE	1
49	010008	KEY	1
50	154005	PROTECTIVE COVER	1
51	154006	CASE COVER (L)	1
52	098035	OIL SEAL 35 x 8-GB9877	1
53	104007	ECCENTRIC ROTATOR	1
54	027011	BERING 6211-GB276	2
55	034100	O-RING 100-GB3452.1	2
56	095008	WASHER 8-GB95	8
57	093008	SPRING WASHER 8 - GB93	8
58	057008-25	BOLT M8 X 25 - GB5783	8
59	154008	CASE COVER (R)	1
60	154009	VIBRATING CASE	1
64	154001	PACKING PIECE	1
65	154002	PLUG SCREW	1

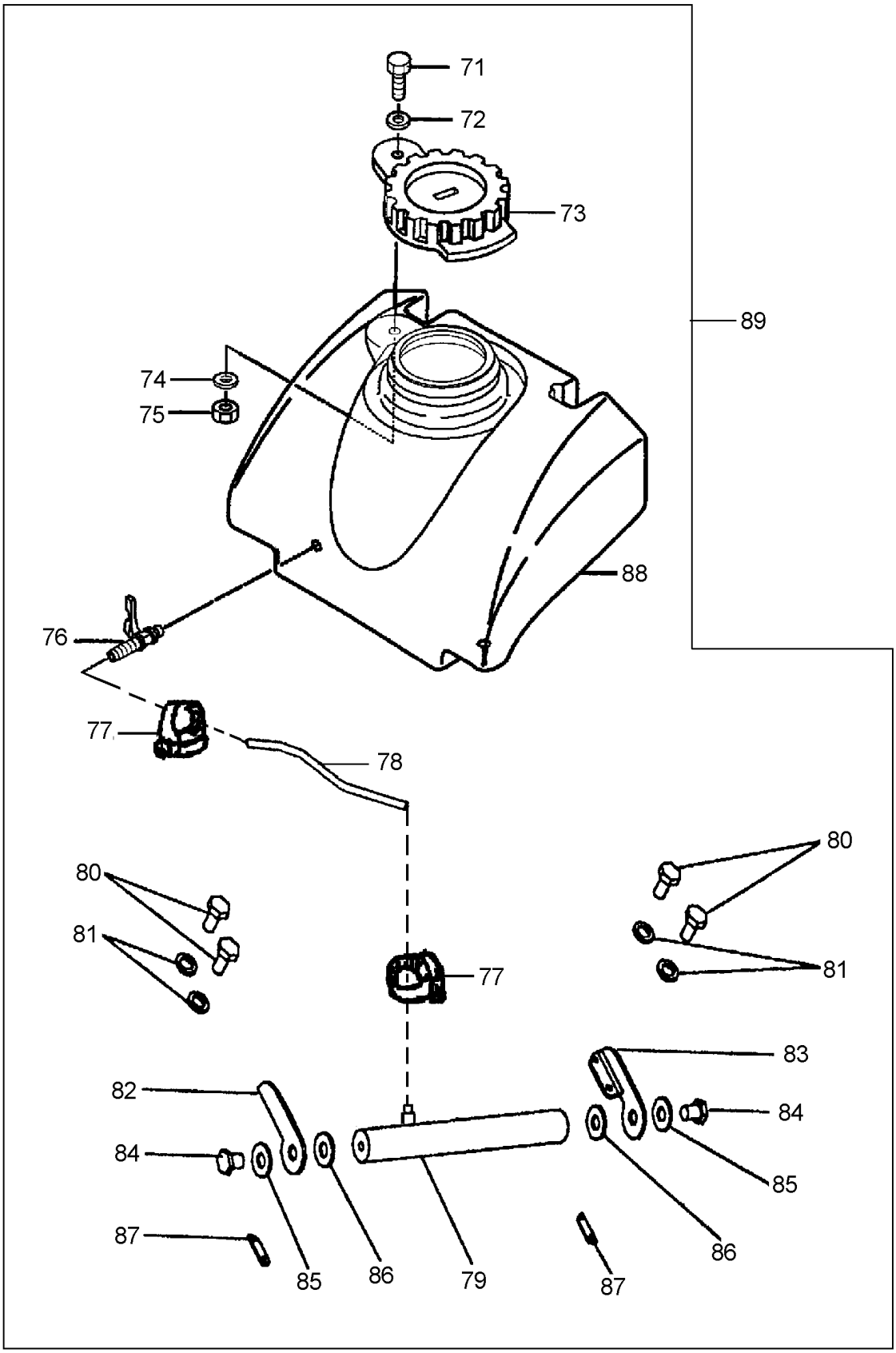

MS60 PARTS LIST 3

MS60 PARTS LIST 3

ITEM NO.	PART NO.	DESCRIPTION	QTY
71	0081800	BOLT M10X30-GB818	1
72	0097010	WASHER 10-GB97.1	1
73	A2008005-1	CAP OF WATER TANK	1
74	0097010	WASHER 10-GB97.1	1
75	0088910	NUT M10-GB889	1
76	A2008007-1	COCK	1
77	A2008003-1	CLIP HOOP	1
78	A2008008	HOSE ∮10X100	1
79	A2008009-1	SPRING PIPE	1
80	0070008	BOLT M8X16-GB70	4
81	0093008	SPRING WASHER8-GB93	4
82	A2008010	PIPE HOLDER (L.)	1
83	A2008011	PIPE HOLDER (R.)	1
84	0057838	BOLT M8X16-GB5783	2
85	0093008	SPRING WASHER8-GB93	2
86	A2008012	SEAT PACKING	2
87	A2008013	RUBBER WASHER	2
88	A2008006-1	WATER TANK	1
89	2008014	WATER TANK ASSY. (OPTIONAL)	1

Distributed By

MASALTA ENGINEERING CO., LTD

Add: Weisi Road, Baohe Industrial Estate, Hefei, China
Tel: 86-551-4846600, 4846601 Fax: 86-551-4846616
E-mail: sales@masalta.com.cn, masalta@mail.hf.ah.cn,
Http://www.masalta.com.cn

Version: 01/08/06

ОФИЦИАЛЬНЫЙ ДИЛЕР В УКРАИНЕ:
storgom.ua

ГРАФИК РАБОТЫ:
Пн. – Пт.: с 8:30 по 18:30
Сб.: с 09:00 по 16:00
Вс.: с 10:00 по 16:00

КОНТАКТЫ:
+38 (044) 360-46-77
+38 (066) 77-395-77
+38 (097) 77-236-77
+38 (093) 360-46-77

Детальное описание товара: https://storgom.ua/product/vibroplita-masalta-ms60-2.html
Другие товары: https://storgom.ua/vibroplity.html