MASALTA®

PARTS MANUAL
REVERSIBLE PLATE COMPACTOR MS330

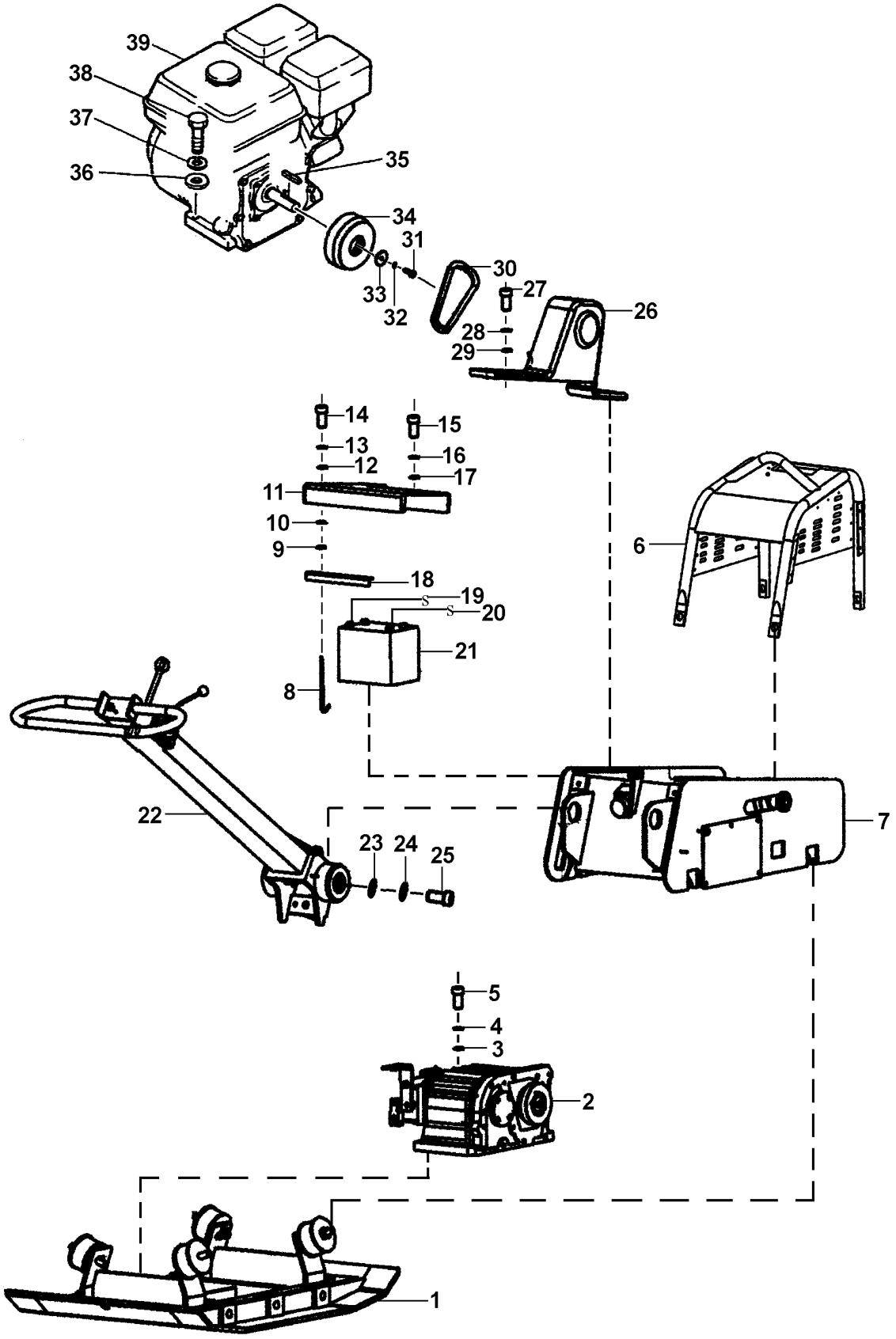

MS330 PARTS LIST 1

MS330 PARTS LIST 1

ITEM NO	PART NO	DESCRIPTION	QTY
1	H330100000	BASE PLATE ASSEMBLY	1
2	H330200000	VIBRATION BOX	1
3	T97.1-18	WASHER 18	4
4	T94.1-18	SPRING WASHER 18	4
5	T5781-M18X55	BOLT M18X55	4
6	H330600000-A	PROTECTION FRAME ASSEMBLY	1
7	H330300000	ENGINE MOUNTING PLATE ASSEMBLY	1
8	T6185.1-M6	BOLT M6	2
9	T97.1-6	WASHER 6	2
10	T94.1-6	NUT M6	2
11	H330400001	PROTECTION GUARD	1
12	T97.1-10	WASHER 10	4
13	T94.1-10	SPRING WASHER 10	4
14	T5781-M10X100	BOLT M10X100	4
15	T5781-M8X30	BOLT M8X30	3
16	T94.1-8	SPRING WASHER 8	3
17	T97.1-8	WASHER 8	3
18	H330400002	ANGLE PLATE	1
19	H330400003	WIRE (L)	1
20	H330400004	WIRE (R)	1
21	H330400005	BATTERY	1
22	H330500000-A	HANDLE ASSEMBLY	1
23	T97.1-16	WASHER 16	2
24	T94.1-16	SPRING WASHER 16	2
25	T5781-M16X55	BOLT M16X55	2
26	H330700001	V-BELT GUARD	1
27	T5781-M10X30	BOLT M10X30	2
28	T94.1-10	SPRING WASHER 10	2
29	T97.1-10	WASHER 10	2
30	H330700002-1	V-BELT FOR DIESEL ENGINE	1
	H330700002-2	V-BELT FOR PETROL ENGINE	1
31	H330800001-1	SCREW M10X1.25X25 FOR DIESEL ENGINE	1
	H330800001-2	SCREW 7/16-20 FOR PETROL ENGINE	1
32	H330800002-1	SPRING WASHER 10 FOR DIESEL ENGINE	1
	H330800002-2	SPRING WASHER 12 FOR PETROL ENGINE	1
33	H330800003-1	WASHER 10 FOR DIESEL ENGINE	1
	H330800003-2	WASHER 12 FOR PETROL ENGINE	1
34	H330800004-1	ENGINE PULLEY FOR DIESEL	1
	H330800004-2	ENGINE PULLEY FOR CHINESE	1
	H330800004-3	ENGINE PULLEY FOR ROBIN	1
	H330800004-4	ENGINE PULLEY FOR HONDA	1
35	H330800005-1	KEY B6X40 GB1096 FOR DIESEL ENGINE	1
	H330800005-2	KEY 1/4X1 1/2 FOR PETROL ENGINE	1
36	T97.1-10	WASHER 10	8
37	T94.1-10	SPRING WASHER 10	4
38	T5781-M10X50	BOLT M10X50	4
39	H330900000-1	DIESEL ENGINE	1
	H330900000-2	CHINESE ENGINE	1
	H330900000-3	ROBIN ENGINE	1
	H330900000-4	HONDA ENGINE	1

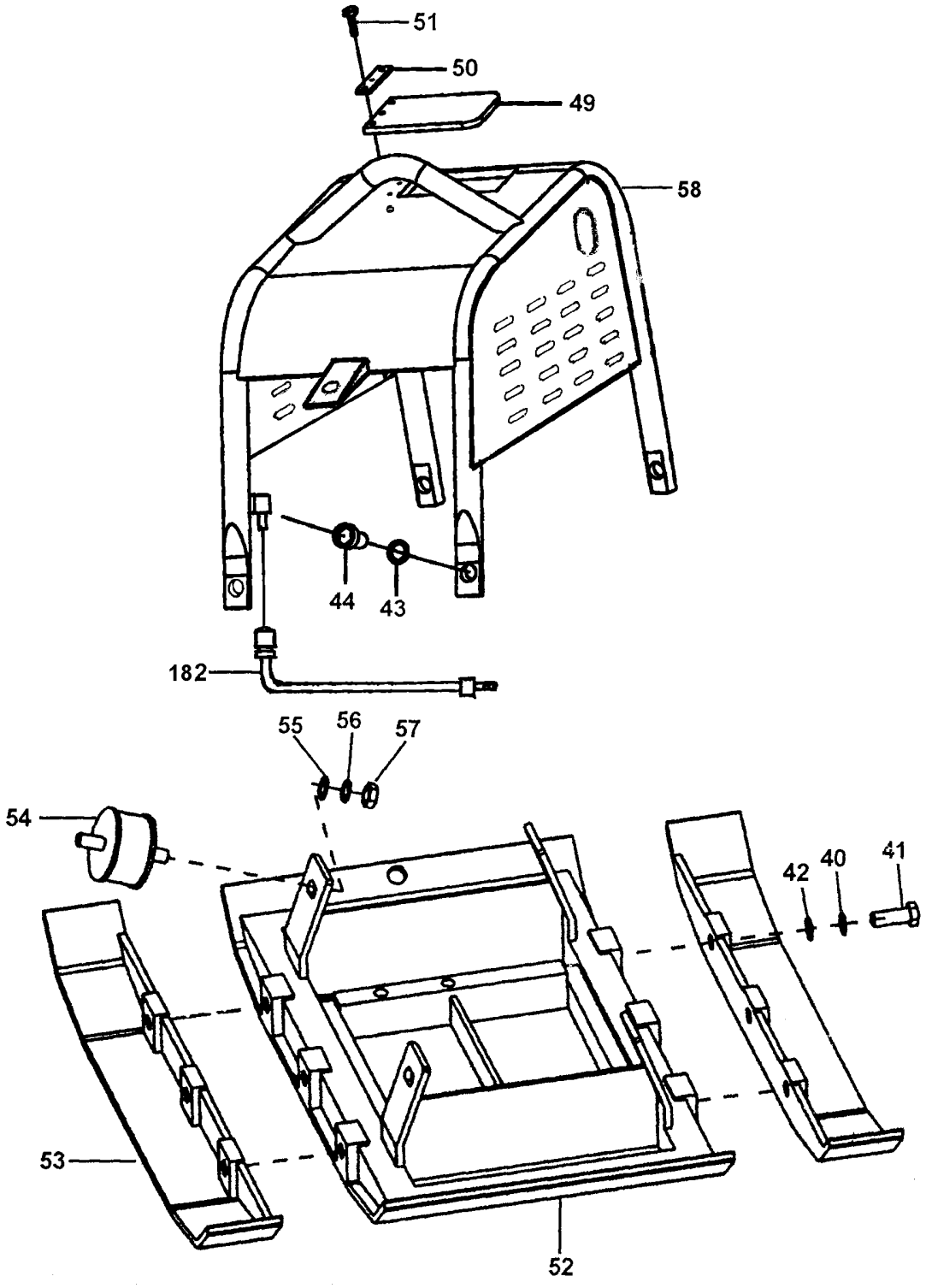

MS330 PARTS LIST 2

MS330 PARTS LIST 2

ITEM NO	PART NO	DESCRIPTION	QTY
40	T94.1-20	SPRING WASHER 20	6
41	T5781-M20X55	BOLT M20X55	6
42	T97.1-20	WASHER 20	6
43	T94.1-12	SPRING WASHER 12	4
44	T70.1-M12X40	BOLT M12X40	4
49	H330600002	RUBBER PLATE	1
50	H330600003	FIXING PLATE	1
51	T5781-M8X30	BOLT M8X30	3
52	H330100001	BASE PLATE	1
53	H330100002	EXTENSION PLATE	2
54	H330100003	VIBRATION DAMPER	4
55	T97.1-16	WASHER 16	8
56	T94.1-16	SPRING WASHER 16	8
57	T6185.1-M16	NUT M16	8
58	H330600004-A	PROTECTION FRAME	1
182	H330600005	OIL DRAIN PIPE	1

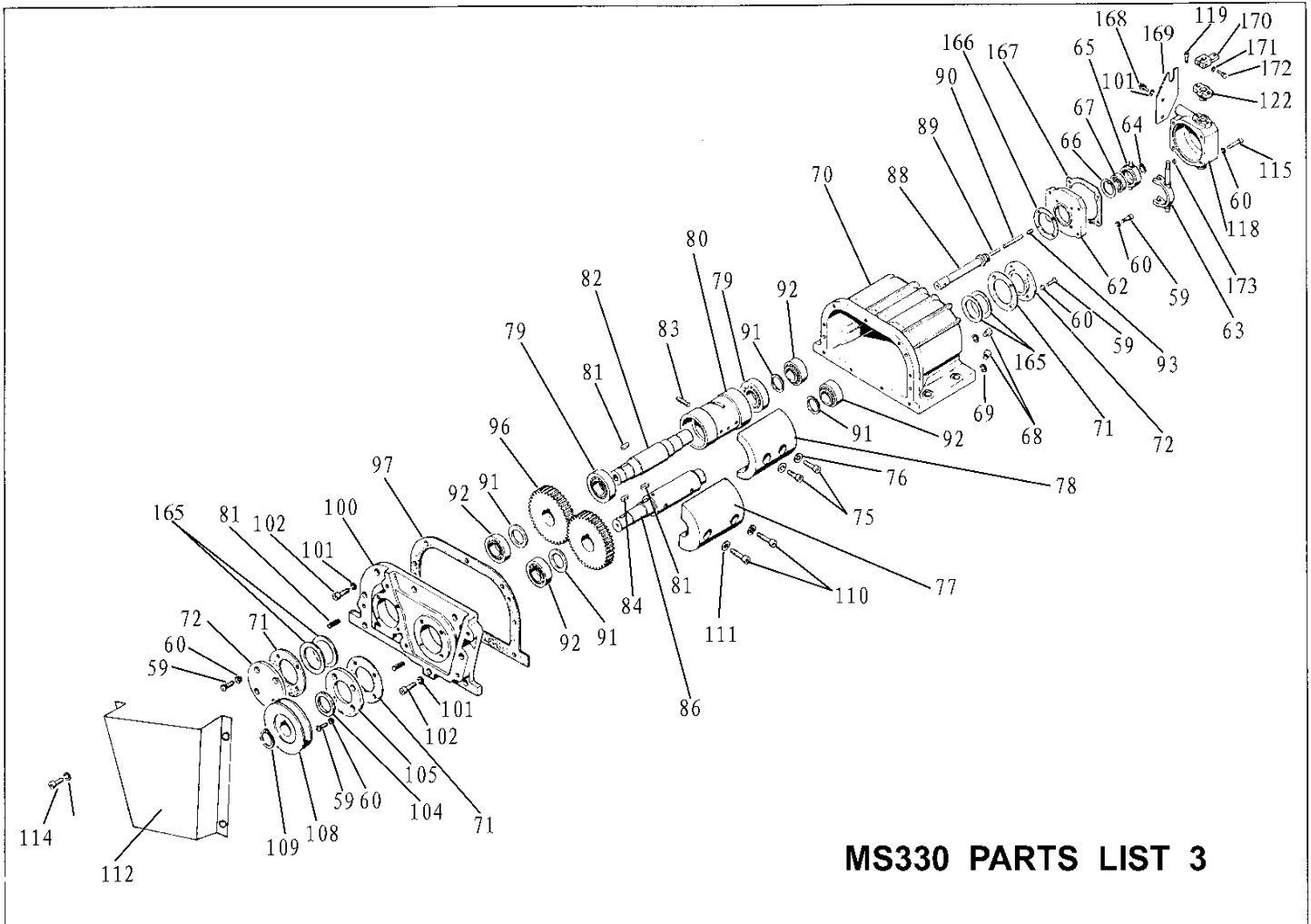

MS330 PARTS LIST 3

MS330 PARTS LIST 3

ITEM NO	PART NO	DESCRIPTION	QTY
59	T70.1-M8X25	BOLT M8X25	16
60	T94.1-8	SPRING WASHER 8	24
62	H330200001	PLATE	1
63	H330200002	SHITER SPINDLE	1
64	T894.1-20	RETAINING RING 20	1
65	H330200003	BEARING HOUSING	1
66	T893.1-47	RETAINING RING 47	1
67	T276-204	BEARING 204	1
68	T5781-M14X1.5	BOLT M14X1.5	4
69	T97.1-14	WASHER 14	4
70	H330200004	EXCITER BOX	1
71	H330200005	COVER GASKET	4
72	H330200006	BEARING COVER	1
75	T5781-M12X25	BOLT M12X25	3
76	T94.1-12	SPRING WASHER 12	2
77	H330200008	UNBALANCE WEIGHT	1
78	H330200007	UNBALANCE WEIGHT	1
79	TSL183008A-C3	BEARING SL183008A-C3	2
80	H330200009	ROTARY COVER	1
81	T1096-A8X25	KEY 8X25	2
82	H330200010	SPINDLE	1
83	H330200011	PIN	1
84	T1096-A8X25	KEY 8X25	1
86	H330200012	PULLEY SHAFT	1
88	H330200013	SPINDLE	1
89	H330200014	PIN 6.5X60	1
90	H330200015	PIN 6.5X60	4
91	H330200016	WASHER	4
92	T283-32206	BEARING 32206	1
93	T77-M8X20	SCREW M8X20	1

(TO BE CONTINUED)

MS330 PARTS LIST 3

ITEM NO	PART NO	DESCRIPTION	QTY
96	H330200018	GEAR	2
97	H330200019	SPACER	1
100	H330200021	BOX COVER	1
101	T94.1-10	SPRING WASHER 10	11
102	T5781-M10X30	BOLT M10X30	9
104	T13871-FB30X50	OIL SEAL FB30X50	2
105	H330200023	BEARING COVER	1
108	H330200024	PULLEY	1
109	T894.1-28	RETAINING RING 28	1
110	T70.1-M12X40	BOLT M12X40	2
111	T94.1-12	SPRING WASHER 12	2
112	H330200025	BELT GUARD	1
114	T70.1-M8X16	BOLT M8X16	4
115	T5781-M8X60	BOLT M8X60	4
116	T94.1-8	SPRING WASHER 8	4
117	T97.1-8	WASHER 8	4
118	H330200026	DIRECTION HOUSING	1
119	T5781-M8X16	BOLT M8X16	2
120	T97.1-8	WASHER 8	2
121	T94.1-8	SPRING WASHER 8	2
122	H330200027	SELF-LUBRICATED BEARING	1
165	H330200028	SHIM	4
166	H330200029	SEAL	1
167	H330200030	SEAL	1
168	T5781-M10X25	BOLT M10X25	2
169	H330200031	SHIFTER PLATE	1
170	H330200032	SHIFTER ARM	1
171	T94.1-6	SPRING WASHER 6	1
172	T5781-M6X30	BOLT M6X30	1
173	H330200033	FORK KEY	1

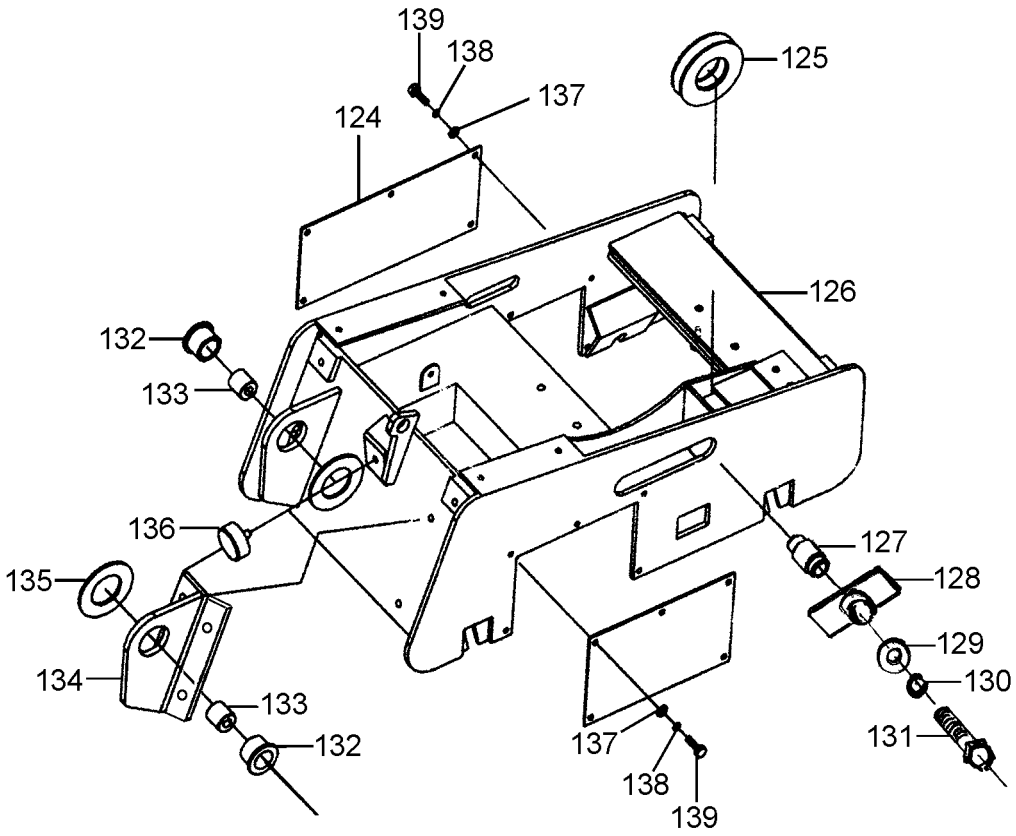

MS330 PARTS LIST 4

ITEM NO	PART NO	DESCRIPTION	QTY
124	H330300001	OVERING PLATE	2
125	H330300002	ADJUSTING PULLEY	1
126	H330300003	ENGINE MOUNTING PLATE	1
127	H330300004	COLLAR	1
128	H330300005	ASSEMBLING PLATE	1
129	T97.1-16	WASHER 8	1
130	T94.1-16	SPRING WASHER 8	1
131	T5781-M16X55	BOLT M16X55	1
132	H330300006	NYLON COLLAR	2
133	H330300007	STEEL RING	2
134	H330300008	SUPPORTING PLATE	1
135	H330300009	NYLON WASHER	2
136	H330300010	RUBBER MOUNT	1
137	T97.1-8	WASHER 8	10
138	T94.1-8	SPRING WASHER 8	10
139	T5781-M8X20	BOLT M8X20	10

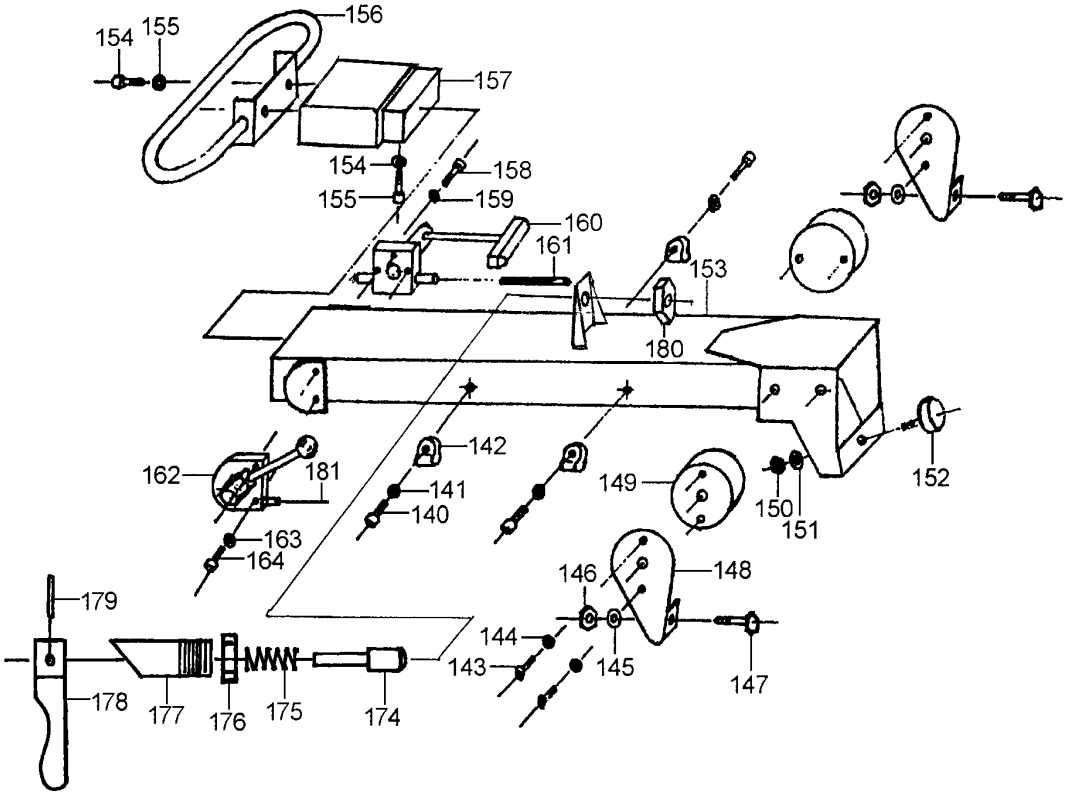

MS330 PARTS LIST 5

ITEM NO	PART NO	DESCRIPTION	QTY
140	T5781-M8X20	BOLT M8X20	1
141	T94.1-8	SPRING WASHER 8	1
142	H330500001	CLIP	3
143	T703-M8X20	SCREW M8X20	4
144	T861.1-8	WASHER 8	2
145	T97.1-10	WASHER 10	4
146	T6185.1-10	NUT M10	2
147	T5781-M10X30	SCREW M10X30	2
148	H330500002	STOP PLATE	2
149	H330500003	RUBBER MONUT	2
150	T5781-M10X25	BOLT M10X25	1
151	T94.1-10	SPRING WASHER 10	1
152	H330500004	VIBRATION DAMPER	1
153	H330500005-A	HANDLE	1
154	T94.1-10	SPRING WASHER 10	4
155	T5781-M10X25	BOLT M10X25	4
156	H330500006	HANDLE	1
157	H330500007	ASSEMBLING CAST	1
158	T5781-M6X50	BOLT M6X50	3
159	T94.1-6	SPRING WASHER 6	3
160	H330500008	TRAVEL LEVER	1
161	H330500009	CABLE	1
162	H330500010-A	THROTTLE LEVER	1
163	T94.1-6	SPRING WASHER 6	2
164	T5781-M6X35	BOLT M6X35	2
174	H330500011	PIN	1
175	H330500012	SPRING	1
176	H330500013	NUT	2
177	H330500014	SCREW ROD	1
178	H330500015	PULLING HANDLE	1
179	H330500016	KEY	1
180	H330500017	NUT	1
181	H330500018	THROTTLE WIRE ASSY	1

Distributed By

MASALTA ENGINEERING CO., LTD

Add: Weisi Road, Baohe Industrial Estate, Hefei, China
Tel: 86-551-4846600, 4846601 Fax: 86-551-4846616
E-mail: sales@masalta.com.cn, masalta@mail.hf.ah.cn,
Http://www.masalta.com.cn

Version: 01/08/03

ОФИЦИАЛЬНЫЙ ДИЛЕР В УКРАИНЕ:
storgom.ua

ГРАФИК РАБОТЫ:
Пн. – Пт.: с 8:30 по 18:30
Сб.: с 09:00 по 16:00
Вс.: с 10:00 по 16:00

КОНТАКТЫ:
+38 (044) 360-46-77
+38 (066) 77-395-77
+38 (097) 77-236-77
+38 (093) 360-46-77

Детальное описание товара: https://storgom.ua/product/vibroplita-reversivnaia-masalta-ms330-4.html
Другие товары: https://storgom.ua/vibroplity.html